Моторизованный реверсивный рубильник Socomec ATyS d - руководство по эксплуатации. Юниджет

Постоянная ссылка на страницу: https://www.uni-jet.com/catalog/commutation/pereklyuchateli-nagruzki/socomec-atys-r-atys-d/

INSTRUCTION MANUAL

ATyS d

Remote Transfer Switching Equipment

EN

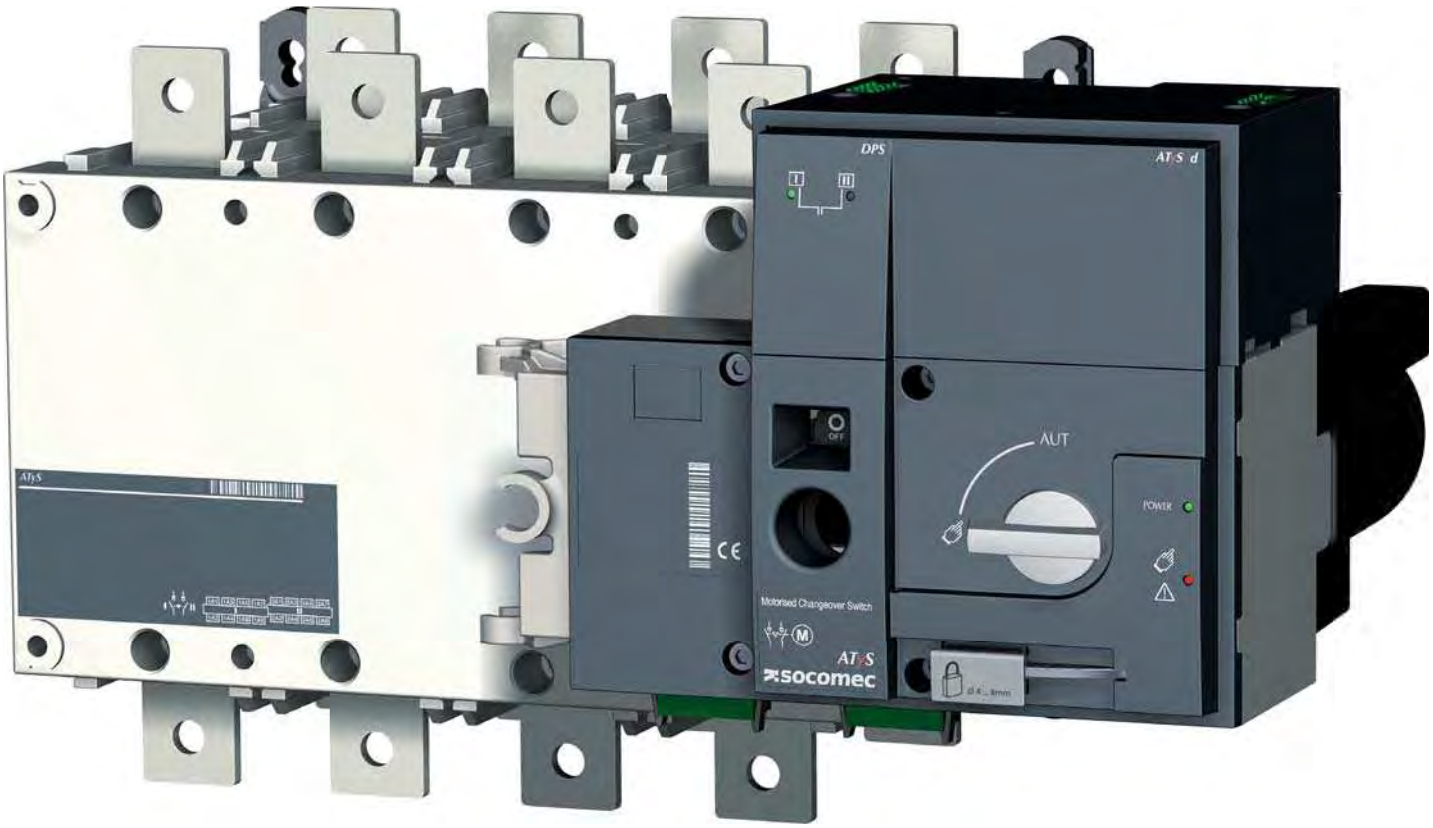

www.socomec.com

socomec
Innovative Power Solutions

www.socomec.com
To download, brochures, catalogues and technical manuals:

This manual is available for download in French, English, German, Italian, Spanish, Dutch, Portugese, Russian, Polish, Turkish and Chinese.

INDEX

1. GENERAL SAFETY INSTRUCTIONS 6

2. INTRODUCTION 7

3. THE ATYS FAMILY PRODUCT RANGE 8

3.1. THE ATYS RANGE KEY FEATURES 8

4. QUICK START 10

4.1. QUICK START ATYS D FRAME B3 TO B5 (125A TO 630A) 10

4.1. QUICK START ATYS D FRAME B6 TO B8 (800A TO 3200A) 12

5. GENERAL OVERVIEW 14

5.1. PRODUCT INTRODUCTION 14

5.2. PRODUCT IDENTIFICATION 15

5.3. ENVIRONMENTAL 16

5.3.1. IP RATING 16

5.3.2. OPERATING CONDITIONS 16

5.3.3. STORAGE CONDITIONS 16

5.3.4. VOLUME AND SHIPPING WEIGHTS BY REFERENCE ATYS D 17

5.3.5. CE MARKING 18

5.3.6. LEAD FREE PROCESS 18

5.3.7. WEEE 18

5.3.8. EMC STANDARD 18

5.4. ATYS D ACCESSORIES AVAILABLE 19

5.4.1. INSTALLATION 20

5.5. PRODUCT DIMENSIONS 20

5.5.1. DIMENSIONS: FRAME B3 TO B5 (125A TO 630A) 20

5.5.2. DIMENSIONS: FRAME B6 & B7 (800A TO 1600A) 21

5.5.3. DIMENSIONS: FRAME B8 (2000A TO 3200A) 22

5.6. MOUNTING ORIENTATION 23

5.7. ASSEMBLY OF CUSTOMER MOUNTED ACCESSORIES 23

5.7.1. BRIDGING BAR INSTALLATION 23

5.7.2. COPPER BAR CONNECTION KITS (2000A TO 3200A : FRAME B8) 24

5.7.3. INCOMING COPPER BAR CONNECTION KIT ASSEMBLY 25

5.7.4. OUTGOING BRIDGE CONNECTION ASSEMBLY 25

5.7.5. TERMINAL SHROUDS 26

5.7.6. TERMINAL SCREENS 26

5.7.7. EXTERNAL POWER SUPPLY (400VAC - 230VAC) 27

5.7.8. RAISED MOUNTING SPACERS 27

5.7.9. PADLOCKING KEY INTERLOCKS 28

5.7.10. ADDITIONAL AUXILIARY CONTACTS 28

6. CONNECTIONS 29
6.1. POWER CIRCUITS 29
6.1.1. CABLE OR BAR CONNECTIONS 29
6.1.2. POWER CONNECTION TERMINALS 29
6.1.3. POWER CONNECTION CROSS-SECTION 29
6.2. CONTROL CIRCUITS 30
6.2.1. TYPICAL ATYS D WIRING 30
6.2.2. ATYS D INPUT AND OUTPUT CONTACTS 31
6.2.3. ATYS D RTSE + ATS CONTROLLERS TYPE ATYS C30 AND ATYS C40 32
7. ATYS D OPERATING MODES 33
7.1. MANUAL OPERATION 34
7.1.1. EMERGENCY MANUAL OPERATION 34
7.1.2. PADLOCKING 34
7.2. ELECTRICAL OPERATION 35
7.2.1. POWER SUPPLY 35
7.2.2. FIXED INPUTS 35
7.2.3. FIXED OUTPUTS - DRY CONTACTS 37
8. CHARACTERISTICS 39
9. PREVENTIVE MAINTENANCE 42
10. TROUBLE SHOOTING GUIDE 42
11. ACCESSORIES 43
11.1. TERMINAL SHROUDS 43
11.2. TERMINAL SCREENS 43
11.3. BRIDGING BARS 43
11.4. COPPER BAR CONNECTION KITS 44
11.5. SOLID NEUTRAL 44
11.6. AUTOTRANSFORMER 400/230 VAC 44
11.7. DC POWER SUPPLY 45
11.8. VOLTAGE RELAY 45
11.9. DOOR PROTECTIVE SURROUND 45
11.10. AUXILIARY CONTACTS (ADDITIONAL) 45
11.11. MOUNTING SPACERS 45
11.12. 3 POSITION PADLOCKING (I - 0 - II) 46
11.13. RONIS KEY INTERLOCKING SYSTEM 46
11.14. REMOTE INTERFACE 46
11.15. CONNECTION CABLE FOR REMOTE INTERFACE 46
11.16. AUTO/MANUAL KEY SELECTOR 46
12. SPARE PARTS 47

12.1. ELECTRONIC MODULE 47
12.2. MOTORISATION MODULE 47
12.3. POWER SECTION 47

13. ATYS FAMILY: ORDERING INFORMATION 48

1. GENERAL SAFETY INSTRUCTIONS

- This manual provides instructions on safety, connections and operation of the ATyS d motorised changeover switch manufactured by SOCOMEC.
- Whether the ATyS d is sold as a loose product, as a spare, as an enclosed solution or as any other configuration, this device must always be installed and commissioned by qualified and experienced personnel, in line with the manufacturers recommendations, following good engineering practices and after having read and understood the details in the latest release of the relative product instruction manual.
- Maintenance on the product and any other associated equipment including but not limited to servicing operations must be performed by adequately trained and qualified personnel.
- Each product is shipped with a label or other form of marking including rating and other important specific product information. One must also refer to and respect markings on the product prior to installation and commissioning for values and limits specific to that product.
- Using the product outside the intended scope, outside SOCOMEC recommendations or outside the specified ratings and limits can cause personal injury and/or damage to equipment.
- This instruction manual must be made accessible so as to be easily available to anyone who may need to read it in relation with the ATyS d.
- The ATyS d meets the European Directives governing this type of product and includes CE marking on each product.
- No covers on the ATyS d should be opened (with or without voltage) as there may still be dangerous voltages inside the product such as those from external circuits.
- **Do not handle any control or power cables connected to the ATyS d when voltage may be present on the product directly through the mains or indirectly through external circuits.**
- Voltages associated with this product may cause injury, electric shock, burns or death. Prior to carry out any maintenance or other work on live parts or other parts in the vicinity of exposed live parts, ensure that the switch including all control and associated circuits are de-energized.

DANGER	WARNING	CAUTION
RISK: Electric shock, burns, death	**RISK:** Possible personal injury	**RISK:** Equipment damage

- As a minimum the ATyS d comply with the following international standards:

  - IEC 60947-6-1
  - GB 14048-11
  - EN 60947-6-1
  - VDE 0660-107
  - BS EN 60947-6-1
  - NBN EN 60947-6-1
  - IEC 60947-3
  - IS 13947-3
  - EN 60947-3
  - NBN EN 60947-3
  - BS EN 60947-3

  The information provided in this instruction manual is subject to change without notice, remains for general information only and is non-contractual.

2. INTRODUCTION

ATyS d “remotely operated transfer switching equipment” (RTSE) is designed for use in power systems for the safe transfer of a load supply between a normal and an alternate source. The changeover is done in open transition and with minimum supply interruption during transfer ensuring full compliance with IEC 60947-6-1, GB 14048-11 and other international TSE standards as listed.

The ATyS d is a full load break (switch type) derived transfer switching equipment where the main components are proven technology devices also fulfilling requirements in IEC 60947-3 standards.

As a Class PC RTSE, the ATyS d is capable of “making and withstanding short circuit currents” assigned to IEC 60947-3 utilization categories of up to AC23A, GB 14048-11, IEC 60947-6-1 and equivalent standards with utilization categories of to AC33B.

ATyS d motorised source changeover switches ensure:

- Power Control and Safety between a normal and an alternate source.
- A complete product delivered as a fully assembled and tested solution.
- Intuitive HMI for emergency / local operation.
- Integrated and robust switch disconnection.
- Window with clearly visible position indication I – 0 - II .
- An inherent failsafe mechanical interlock.
- Stable positions (I – 0 – II) non affected by typical vibration and shocks.
- Constant pressure on the contacts non effected by network voltage.
- Energy Efficient with virtually no consumption whilst on the normal, alternate or off positions.
- Quick, easy and safe dual “on-load” emergency manual operation.
  (Manual operation is functional with and without the motorization in place).
- Extremely rugged, error free and built in padlocking facility.
- Straight forward installation with effective ergonomics.
- Minimal downtime with the possibility to perform easy maintenance.
- Simple and secure motorization controls interface.
- Integrated switch position auxiliary contacts.
- An active “product availability” status feedback.
- Ample accessories to suit specific requirements.
- Compatibility with virtually any make of ATS, AMF, Genset controller.
  (Typically an ATyS C30 / C40 ATS Controller and driven through volt free contacts)

- Power supply continuity for most applications.

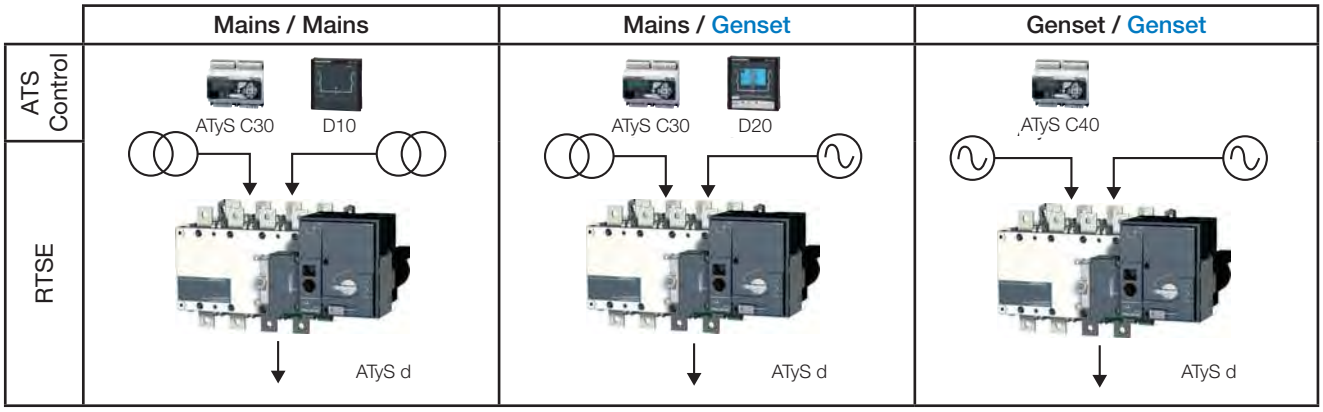

3. THE ATyS FAMILY PRODUCT RANGE

The ATyS d has been engineered by the SOCOMEC centre of excellence in France who boasts it's very own in-house 100MVA instantaneous power test lab accredited by COFRAC and working in partnership with: KEMA, CEBEC, UL, CSA, ASTA, Lloyd's Register of Shipping, Bureau Véritas, BBJ-SEP, EZU, GOST-R… and others.

SOCOMEC has been manufacturing power control and safety products since 1922. The first generation SOCOMEC "motorised changeover switches" were introduced in 1990 and today the ATyS brand has become trusted by major players in the power industry worldwide.

The ATyS Family includes a complete range of remotely operated transfer switch equipment (RTSE) as well as automatic fully integrated products and solutions (ATSE). Selecting the right ATyS will depend on the application as well as the nature of installation in which the ATyS will be installed.

This instruction manual includes details and instructions specific to the "ATyS d" RTSE only. For all other ATyS family of products please refer to the specific instruction manual related to that product.
(Available for download on www.socomec.com)

An overview of the complete ATyS range is presented below:
(The encircled device is the product detailed in this instruction manual).

Just the right ATyS for your application…

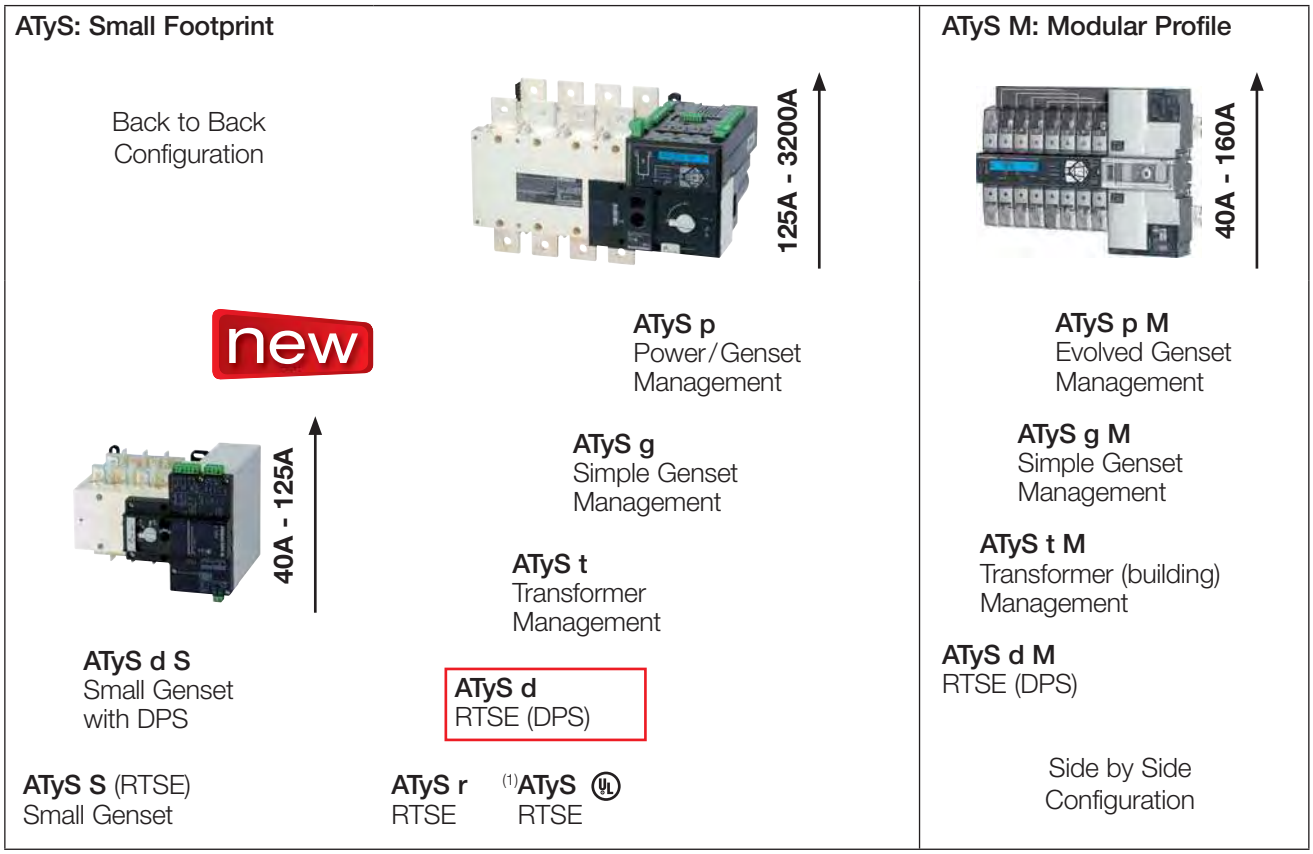

(1) The UL version of ATyS r is available from 100 - 400A

3.1. The ATyS Range Key Features

Selecting the right ATyS will depend on the application, the functionality required as well as the nature of the installation in which the ATyS will be installed. Below is an outline product selection chart listing the key features of each product to help to select the right ATyS for your needs.

IEC 60947-6-1	ATyS S	ATyS Sd	ATyS r	ATyS d	ATyS t	ATyS g	ATyS p
UL 1008			ATyS UL				
Motorised Changeover with control driven by dry contacts	●	●	●	●	●	●	●
Manual Emergency Operation with external handle	●	●	●	●	●	●	●
Wide band AC control voltage supply	●	●	●	●	●	●	●
Wide band DC control voltage supply	●						
Watchdog relay to ensure product availability			●	●	●	●	●
Ratings from 40 – 125A as indicated or 125A - 3200A for •	40 – 125A	40 – 125A	UL 100 – 400A	●	●	●	●
Override controls and force switch to zero (off) position			●	●	●	●	●
Integrated position auxiliary contacts (I - O - II)	●	●	●	●	●	●	●
Source availability LED display				●	●	●	●
Remote Display module RJ45 connection for D10				●	●	●	
Integrated Dual power supply		●		●	●	●	●
Network - Network Applications	●	●	●	●	●		●
Network - Genset Applications	●	●	●	●		●	●
Genset - Genset Applications	●	●	●	●			
Pre-defined fixed I/O			● 5/1	● 5/1	● 9/2	● 11/3	● 5/2
Programmable I/O							● 6/1
Additional programmable I/O modules (Optional up to 4 modules)							● 8/8
Remotely operated Transfer Switching Equipment (RTSE Class PC)	●	●	●	●			
Automatic Transfer Switching Equipment (ATSE Class PC)					●	●	●
Remote + Manual Control	●	●	●	●			
Auto + Remote + Manual Control					●	●	
Auto + Remote + Local + Manual Control							●
Auto-configuration of voltage and frequency levels					●	●	●
Switch Position LED display					●	●	●
Security Sealing Cover					●	●	
Configuration through potentiometers and dip switches					●	●	
Test on load functionality						●	●
Test off load functionality						●	●
Programmable configuration with keypad and LCD display							●
Metering & Measurement: kW; kVar; kVA + kWh; kVarh; kVAh							●
Communication RS485 + Ethernet + Ethernet gateway (Optional)							●
Webserver Access through optional Ethernet module (Optional)							●
Easy Configuration software (Through Ethernet/Modbus)							●
Remote Terminal Unit RJ45 connection for D20							●
Data Logger for Event Recording with RTC (Through Ethernet/Modbus)							●
Programmable Engine Exerciser functionality (Through Ethernet/Modbus)							●
Multi level password access							●
Load Shedding function							●
Capacity Management functionality							●
Peak shaving functionality							●
4 - 20mA communication module (Optional)							●
KWh Pulsed output module (Optional)							●
Counters KWh, permutation…							●
LCD display for programming, metering, timers and counters							●
Possibility to add optional functionality							●

4. QUICK START

4.1. Quick Start ATyS d Frame B3 to B5 (125A to 630A)

socomec
Innovative Power Solutions

QUICK START EN 125A - 630A

ATyS d

Motorised Source Changeover Switch

Preliminary operations

Check the following upon delivery and after removal of the packaging:

- Packaging and contents are in good condition.
- The product reference corresponds to the order.
- Contents should include:
  Qty 1 x ATyS d
  Qty 1 x Emergency handle and fixing clip
  Quick Start instruction sheet

Warning

⚠ Risk of electrocution, burns or injury to persons and / or damage to equipment.

This Quick Start is intended for personnel trained in the installation and commissioning of this product. For further details refer to the product instruction manual available on the SOCOMEC website.

- This product must always be installed and commissioned by qualified and approved personnel.
- Maintenance and servicing operations should be performed by trained and authorised personnel.
- Do not handle any control or power cables connected to the product when voltage may be, or may become present on the product, directly through the mains or indirectly through external circuits.
- Always use an appropriate voltage detection device to confirm the absence of voltage.
- Ensure that no metal objects are allowed to fall in the cabinet (risk of electrical arcing).

Failure to observe good enginering practises as well as to follow these safety instructions may expose the user and others to serious injury or death.

⚠ Risk of damaging the device

- In case the product is dropped or damaged in any way it is recommended to replace the complete product.

Accessories

- Bridging bars and connection kits.
- Control voltage transformer (400Vac -> 230Vac).
- DC power supply (12/24Vdc -> 230Vac).
- Mounting spacers to raise the product x 10mm.
- Phase barriers.
- Terminal shrouds.
- Terminal screens.
- Auxiliary contacts (Additional).
- Padlocking in 3 positions (I - O - II).
- Lockout accessories (RONIS - EL 11 AP).
- Door escutcheon frame.
- Control relay ATyS C30 + D10 or D20.
- Control relay ATyS C40.
- ATyS D10 Interface (remote display).

For further details refer to the product instruction manual under chapter "Spares and Accessories"

www.socomec.com
To download, brochures, catalogues and technical manuals:

Printing informations: 1 color Black. White paper 90g/m².
Printing size: 420x297. Final size 210x297. This page visible first.

541 988 C - 02/14 - EN

Non contractual document.
Subject to change without notice.

Installation and Commissioning

STEP 1 Cabinet / Back Plate Installation
STEP 2 Connecting the POWER section
STEP 3 COMMAND / CONTROL terminal connections
STEP 4 Power SUPPLY terminal connections
STEP 5 CHECK
STEP 6A Control by an external order (AUTO)
STEP 6B Emergency Manual Operation
STEP 6C Padlocking

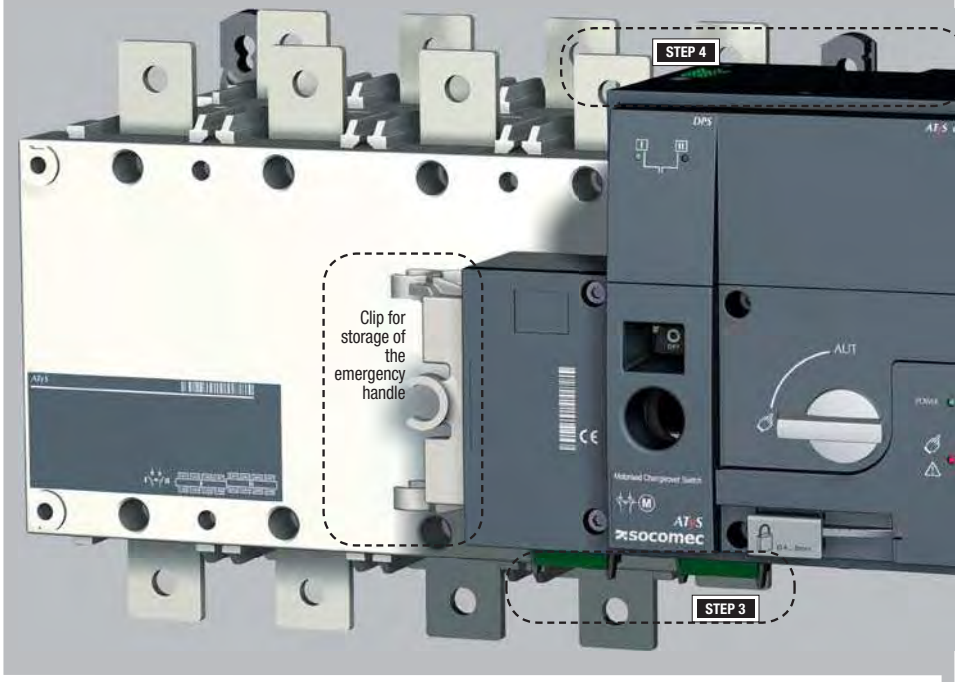

STEP 6B *Manual Operation*

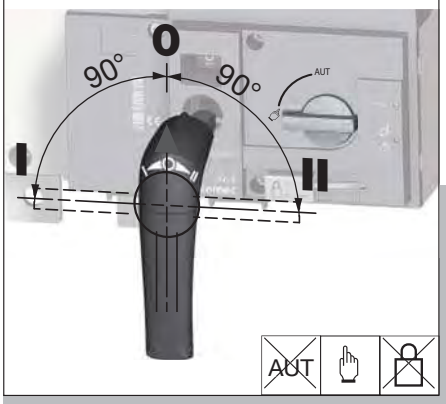

STEP 5

Check

Whilst in manual mode, check the wiring and if ok power up the product.

LED "Power" Green: ON
LED "Source" Green: ON
(I / II or I II)
LED Manuel/Defaut Red
(Product not Available): ON

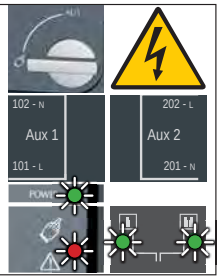

STEP 6A *Automatic Operation*

Ensure that the emergency handle is not inserted in the product and turn the mode selector to the AUT position.
LED "Power" Green: ON
LED Manuel/Default: OFF

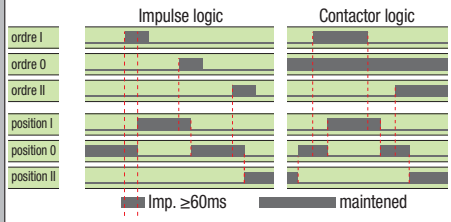

To enable control, close contact 312 with 317.
To force the product to 0 position/OFF bridge the contact 313 with 317.
For contactor logic bridge contact 316 with 317.
To operate: close the contact corresponding to the desired position.

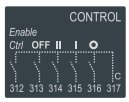

STEP 6C *Padlocking Mode (as standard: in position O)*

STEP 1

Installation

Attention: Ensure that the product is installed on a flat rigid surface. Orientation:

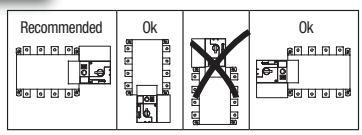

Door cut-out for front panel.

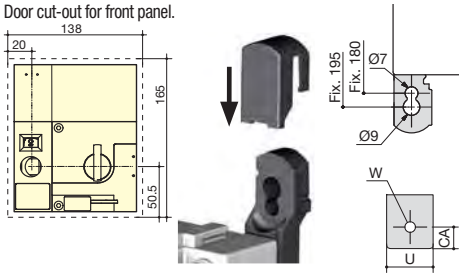

Dimensions in mm.

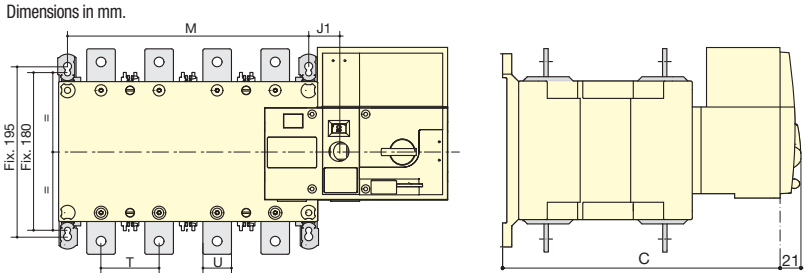

	125 A		160 A		200 A		250 A		315 A		400 A		500 A		630 A	
	3 P	4 P	3 P	4 P	3 P	4 P	3 P	4 P	3 P	4 P	3 P	4 P	3 P	4 P	3 P	4 P
J 1	34	34	34	34	34	34	35	35	35	35	35	35	34	34	34	34
M	120	150	120	150	120	150	160	210	160	210	160	210	210	270	210	270
T	36	36	36	36	36	36	50	50	50	50	50	50	65	65	65	65
C	244	244	244	244	244	244	244	244	244	244	244	244	320	320	320	320
U	20	20	20	20	20	20	25	25	35	35	35	35	32	32	45	45
W	9	9	9	9	9	9	11	11	11	11	11	11	13	13	13	13
CA	10	10	10	10	10	10	15	15	15	15	15	15	20	20	20	20

STEP 2

Power Terminal Connections

To be connected using terminal lugs, rigid or flexable busbars.

	FRAME B3			FRAME B4			FRAME B5	
	125 A	160 A	200 A	250 A	315 A	400 A	500 A	630 A
Minimum cable section Cu (mm²) at Ith	50	70	95	120	185	240	2x150	2x185
Minimum cable section Cu (mm²) at Ith	-	-	-	-	-	-	2x30x5	2x40x5
Maximum cable section Cu (mm²)	50	95	150	150	240	240	2x300	2x300
Maximum Cu busbar width (mm)	20	20	32	32	32	32	50	50
Type of screw	M8	M8	M8	M10	M10	M10	M12	M12
Recommended tightening torque (N.m)	8.3	8.3	8.3	20	20	20	20	20
Maximum tightening torque (N.m)	13	13	13	26	26	26	26	26

STEP 3

CONTROL / COMMAND Terminals - Ensure that the product is in Manual Mode.

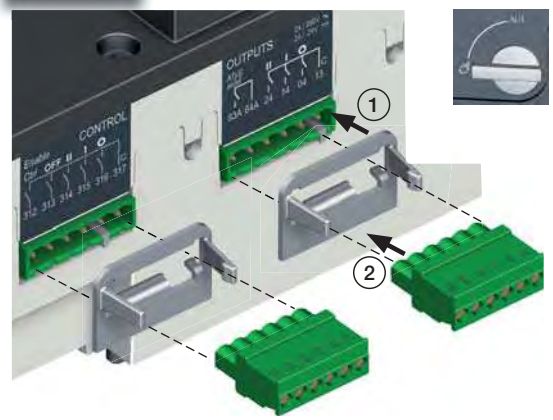

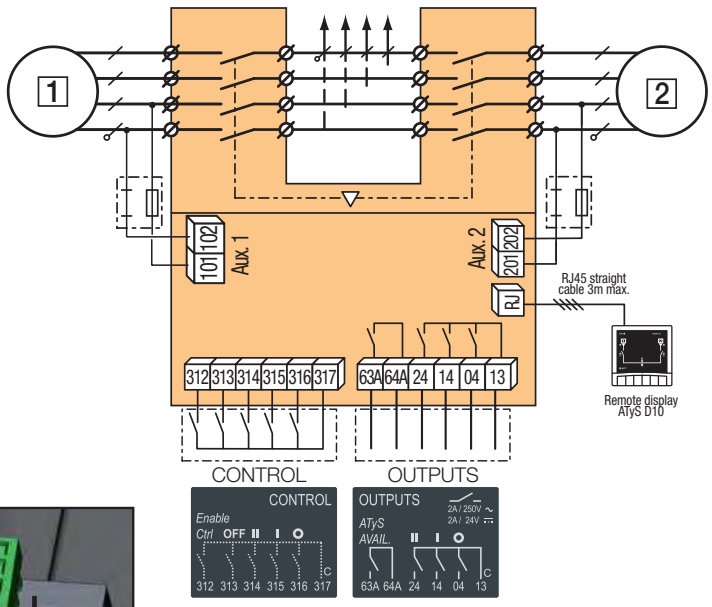

STEP 4

Dual Power Supply Terminals

Connect the product with a cable of section of 1,5 to 2,5 mm².
Screw M3 - Tightening torque: min.: 0.5 Nm - max.: 0.6 Nm

4.1. Quick Start ATyS d Frame B6 to B8 (800A to 3200A)

socomec
Innovative Power Solutions

QUICK START EN 800A - 3200A

ATyS d

Motorised Source Changeover Switch

Preliminary operations

Check the following upon delivery and after removal of the packaging:

- Packaging and contents are in good condition.
- The product reference corresponds to the order.
- Contents should include:
  Qty 1 x ATyS d
  Qty 1 x Emergency handle and fixing clip
  Quick Start instruction sheet

Warning

⚠ Risk of electrocution, burns or injury to persons and / or damage to equipment.

This Quick Start is intended for personnel trained in the installation and commissioning of this product. For further details refer to the product instruction manual available on the SOCOMEC website.

- This product must always be installed and commissioned by qualified and approved personnel.
- Maintenance and servicing operations should be performed by trained and authorised personnel.
- Do not handle any control or power cables connected to the product when voltage may be, or may become present on the product, directly through the mains or indirectly through external circuits.
- Always use an appropriate voltage detection device to confirm the absence of voltage.
- Ensure that no metal objects are allowed to fall in the cabinet (risk of electrical arcing).

Failure to observe good enginering practises as well as to follow these safety instructions may expose the user and others to serious injury or death.

⚠ Risk of damaging the device

- In case the product is dropped or damaged in any way it is recommended to replace the complete product.

Accessories

- Bridging bars and connection kits.
- Control voltage transformer (400Vac -> 230Vac).
- DC power supply (12/24Vdc -> 230Vac).
- Mounting spacers to raise the product x 10mm.
- Phase barriers.
- Terminal shrouds.
- Terminal screens.
- Auxiliary contacts (Additional).
- Padlocking in 3 positions (I - O - II).
- Lockout accessories (RONIS - EL 11 AP).
- Door escutcheon frame.
- Control relay ATyS C30 + D10 or D20.
- Control relay ATyS C40.
- ATyS D10 Interface (remote display).

For further details refer to the product instruction manual under chapter "Spares and Accessories"

www.socomec.com
To download, brochures, catalogues and technical manuals:

Printing informations: 1 color Black. White paper 90g/m².
Printing size: 420x297. Final size 210x297. This page visible first.

541 989 D - 02/14 - EN

Non contractual document.
Subject to change without notice.

Installation and Commissioning

STEP 1 Cabinet / Back Plate Installation

STEP 2 Connecting the POWER section

STEP 3 COMMAND / CONTROL terminal connections

STEP 4 Power SUPPLY terminal connections

STEP 5 CHECK

STEP 6A Control by an external order (AUTO)

STEP 6B Emergency Manual Operation

STEP 6C Padlocking

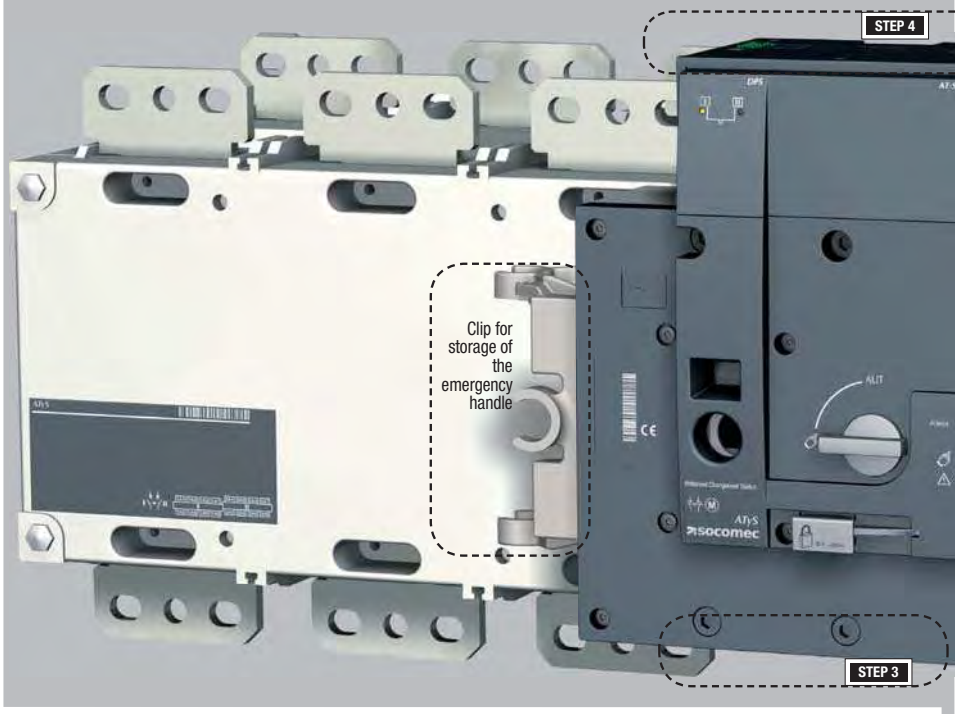

STEP 6B *Manual Operation*

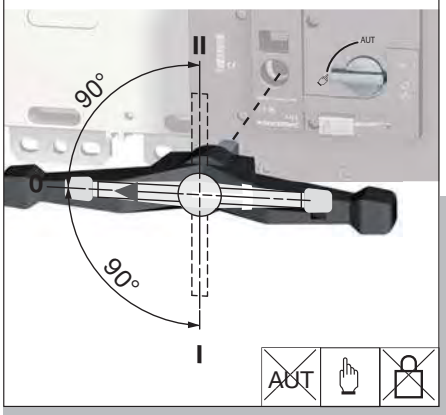

STEP 5

Check

Whilst in manual mode, check the wiring and if ok power up the product.

LED "Power" Green: ON
LED "Source" Green: ON
(I / II or I II)
LED Manuel/Defaut Red
(Product not Available): ON

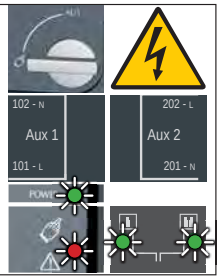

STEP 6A *Automatic Operation*

Ensure that the emergency handle is not inserted in the product and turn the mode selector to the AUT position.
LED "Power" Green: ON
LED Manuel/Default: OFF

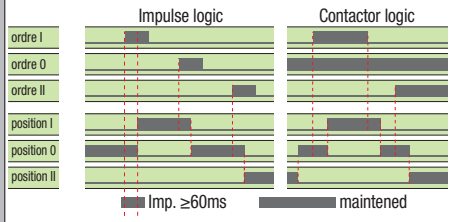

To enable control, close contact 312 with 317.
To force the product to 0 position/OFF bridge the contact 313 with 317.
For contactor logic bridge contact 316 with 317.
To operate: close the contact corresponding to the desired position.

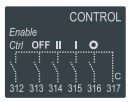

STEP 6C *Padlocking Mode (as standard: in position O)*

STEP 1

Installation

Attention:
Ensure that the product is installed on a flat rigid surface.
Orientation:

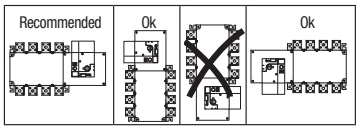

Door cut-out for front panel.

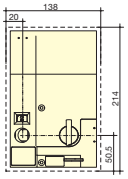

ATyS 800 to 1000 A

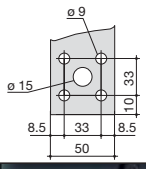

ATyS 1250 A

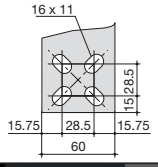

ATyS 1600 to 3200 A

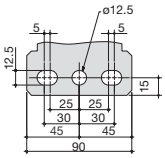

Dimensions in mm.

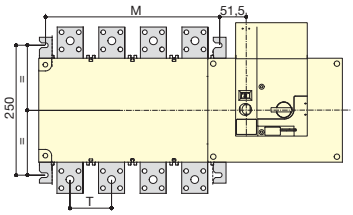

ATyS d 800 to 1600 A

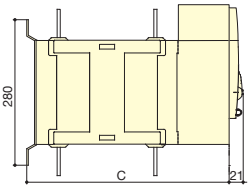

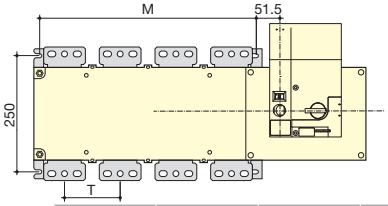

ATyS d 2000 to 3200 A

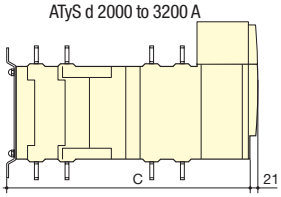

	800 A		1000 A		1250 A		1600 A		2000 A		2500 A		3200 A	
	3 P	4 P	3 P	4 P	3 P	4 P	3 P	4 P	3 P	4 P	3 P	4 P	3 P	4 P
M	255	335	255	335	255	335	347	467	347	467	347	467	347	467
T	80	80	80	80	80	80	120	120	120	120	120	120	120	120
C	391	391	391	391	391	391	391	391	523	523	523	523	523	523

STEP 2

Power Terminal Connections

To be connected using terminal lugs, rigid or flexable busbars.

	FRAME B6			FRAME B7	FRAME B8		
	800 A	1000 A	1250 A	1600 A	2000 A	2500 A	3200 A
Minimum cable section Cu (mm²) at Ith	2x240	-	-	-	-	-	-
Minimum cable section Cu (mm²) at Ith	2x50x5	2x60x5	2x80x5	2x100x5	3x100x5	4x100x5	3x100x10
Maximum cable section Cu (mm²)	2x300	4x185	4x185	6x185	-	-	-
Maximum Cu busbar width (mm)	63	63	63	100	100	100	100
Type of screw	M8	M8	M10	M12	M12	M12	M12
Recommended tightening torque (N.m)	20	20	20	40	40	40	40
Maximum tightening torque (N.m)	26	26	26	45	45	45	45

STEP 3

CONTROL / COMMAND Terminals - Ensure that the product is in Manual Mode.

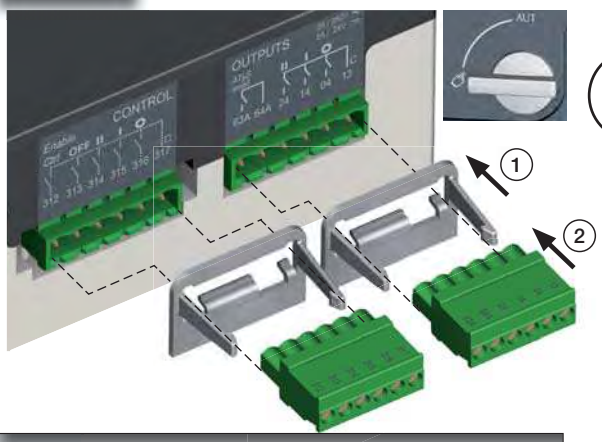

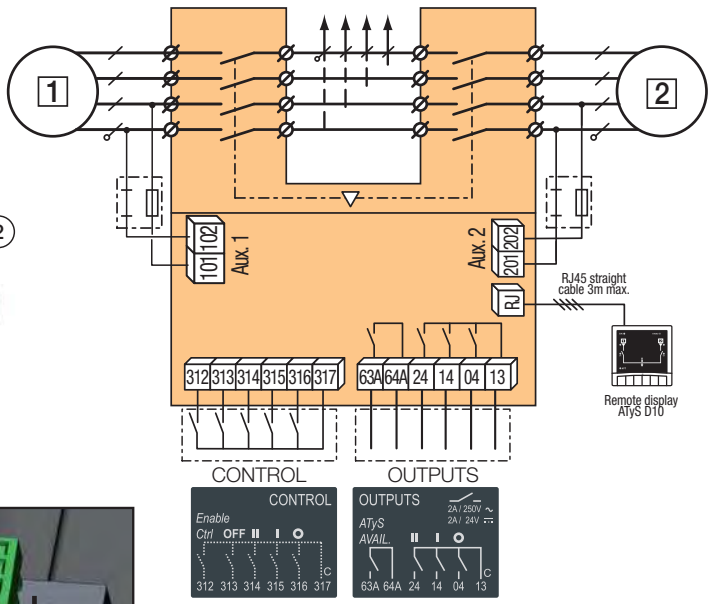

STEP 4

Dual Power Supply Terminals

Connect the product with a cable of section of 1,5 to 2,5 mm².
Screw M3 - Tightening torque: min.: 0.5 Nm - max.: 0.6 Nm

5. GENERAL OVERVIEW

5.1. Product introduction

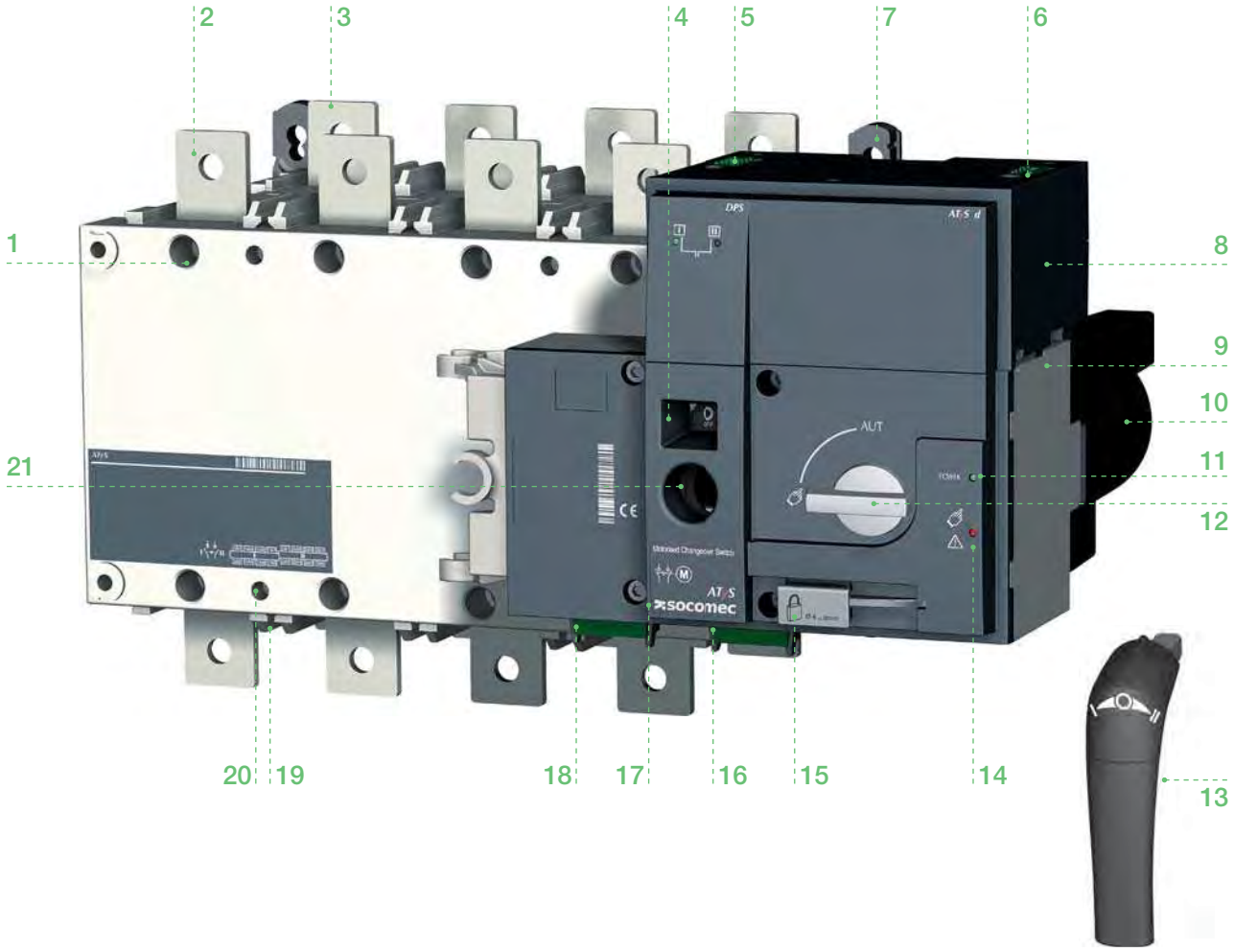

1. Power Section : Changeover switch assembly with inherent mechanical interlock
2. Front : Switch number 1 terminals (3 or 4 pole)
3. Back : Switch number 2 terminals (3 or 4 pole)
4. Switch position indication window : I (On) – O (Off) – II (On)
5. Auxiliary power supply 1 : 230Vac (208 – 277Vac ± 20%)
6. Auxiliary power supply 2 : 230Vac (208 – 277Vac ± 20%)
7. Back-plate mounting ATyS d fixing lugs
8. Dual power supply Module
9. Motorized Control Unit
10. Motor housing
11. Green LED Indication : Power
12. Auto / Manual mode selector switch
13. Emergency manual operation “Direct Handle”
14. Red LED Indication : Product Unavailable / Manual Mode / Fault Condition
15. Padlocking facility (Up to 3 padlocks of dia. 4 – 8mm)
16. Output contacts x 4 (Position indication I-O-II and product availability outputs)
17. Facility for locking all controls in the zero position using a RONIS EL11AP Lock
18. Input contacts x 5 :-
    Position order I-O-II
    Remote control enable
    Override controls and force to Off position
19. Sliders for Terminal Shields
20. Fixing holes for terminal Shields
21. Emergency manual operation shaft location (Accessible only in manual mode)

5.2. Product identification

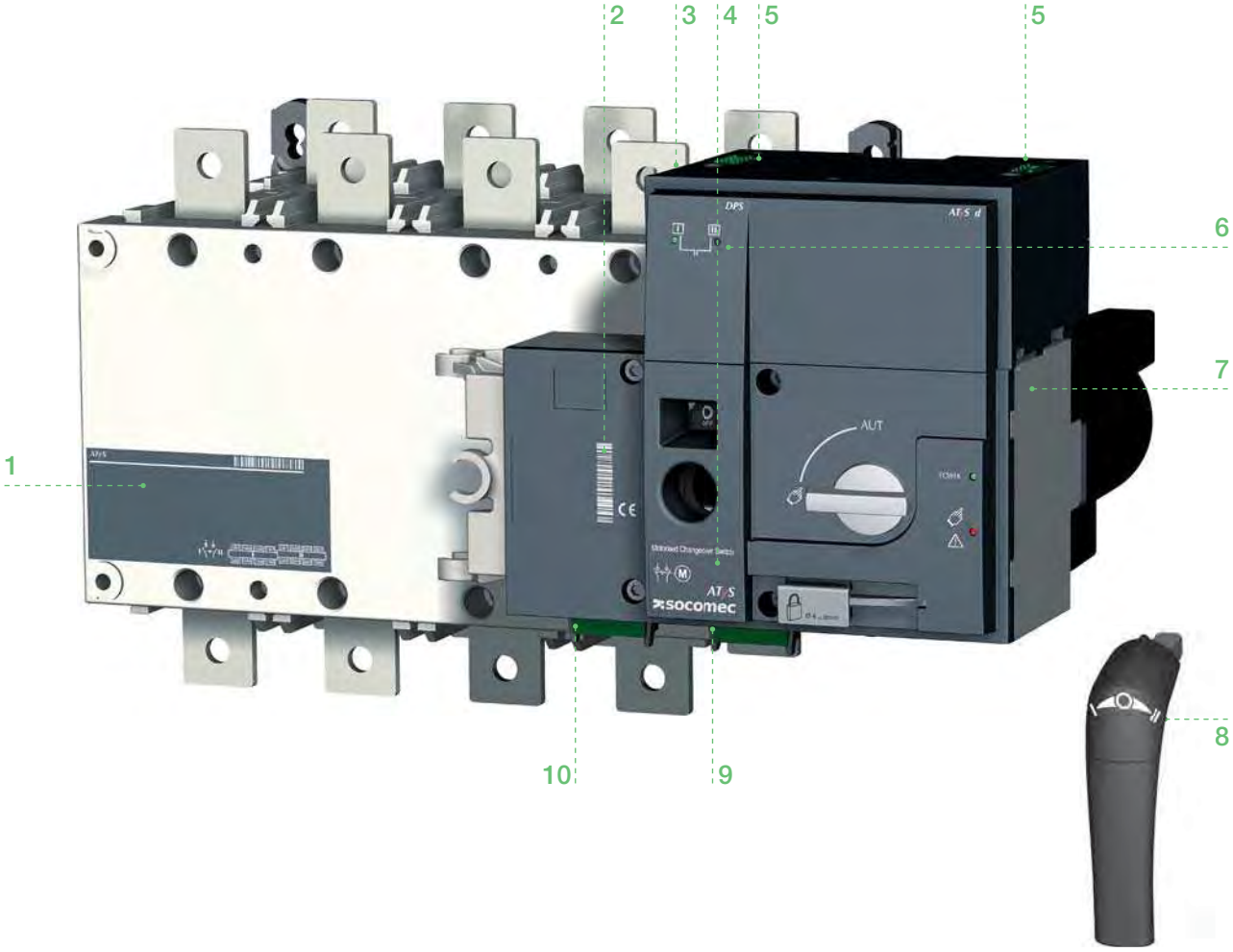

1. Main changeover switch identification label:
   Electrical characteristics
   Applicable standards and
   Terminal incoming and outgoing wiring details.
2. Complete ATyS d product serial number, barcode and CE marking.
3. Switch 1 (Front) and Switch 2 (back) identification labels
4. ATyS d product current rating and reference number label
5. Auxiliary power supply contacts identification label
6. Auxiliary power supply available LED'S
7. Motor barcode and serial number
8. Emergency manual operation direction of rotation indication
9. Output contacts identification label.
10. Input contacts identification label.

5.3. Environmental

The ATyS d product meets the following environmental requirements:

5.3.1. IP Rating

- IP2X against direct contact for the ATyS d motorization control unit.
- IP2X against direct contact for the power section with the connections in place and when including suitable, correctly installed incoming and outgoing terminal shields.
- IP 0 for the bare power section without terminal shields in place.

5.3.2. Operating Conditions

5.3.2.1. Temperature

- From -20 to +40°C without derating
- From -20 to +70°C when applying a Kt derating correction factor

Kt: Correction Factor	Temperature
0.9	40 °C to 50 °C
0.8	50 °C to 60 °C
0.7	60 °C to 70 °C

* Simplified derating method: Ithu ≤ Ith x Kf

* A more precise calculation may be done for specific applications. Should this be required please contact SOCOMEC.

5.3.2.2. Hygrometry

- 80% humidity without condensation at 55°C
- 95% humidity without condensation at 40°C

5.3.2.3. Altitude

- Up to 2000m in altitude without derating
- For higher altitude the Ka correction factors below apply

Ka: Correction Factor	2000 m < A ≤ 3000 m	3000 m < A ≤ 4000 m
Ue	0.95	0.8
Ie	0.85	0.85

5.3.3. Storage Conditions

5.3.3.1. Temperature

- From -40 to +70°C

5.3.3.2. Storage duration period

- Maximum storage up to a period of 12 months
- (Recommendation: To be stored in dry, non corrosive and non saline atmospheric conditions)

5.3.3.3. Storage position

≤ 630 A: a maximum of 3 boxes may be stocked vertically
≥ 800 A: a maximum of 1 box may be stocked vertically

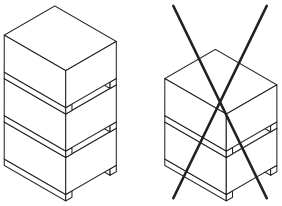

5.3.4. Volume and shipping weights by reference ATyS d

Frame Size	Rating	N° of Poles	Reference Number	Weight (kg)		Volume (cm) inc Packing
				Net	Gross	
B3	125A	3	95 33 **3 012**	6,3	9,6	360x480x370
		4	95 33 **4 012**	7,5	10,8	360x480x370
	160A	3	95 33 **3 016**	6,3	9,6	360x480x370
		4	95 33 **4 016**	7,5	10,8	360x480x370
	200A	3	95 33 **3 020**	6,3	9,6	360x480x370
		4	95 33 **4 020**	7,5	10,8	360x480x370
B4	250A	3	95 33 **3 025**	7,2	10,5	360x480x370
		4	95 33 **4 025**	8,0	11,3	360x480x370
	315A	3	95 33 **3 031**	7,3	10,6	360x480x370
		4	95 33 **4 031**	8,4	11,7	360x480x370
	400A	3	95 33 **3 040**	7,3	10,6	360x480x370
		4	95 33 **4 040**	8,4	11,7	360x480x370
B5	500A	3	95 33 **3 050**	12,0	15,3	536x378x427
		4	95 33 **4 050**	13,9	17,2	536x378x427
	630A	3	95 33 **3 063**	12,5	15,8	536x378x427
		4	95 33 **4 063**	14,6	17,9	536x378x427
B6	800A	3	95 33 **3 080**	28,5	44,5	730x800x600
		4	95 33 **4 080**	32,8	48,8	730x800x600
	1000A	3	95 33 **3 100**	29,0	45,0	730x800x600
		4	95 33 **4 100**	33,5	49,5	730x800x600
	1250A	3	95 33 **3 120**	29,5	45,5	730x800x600
		4	95 33 **4 120**	34,2	50,2	730x800x600
B7	1600A	3	95 33 **3 160**	33,7	49,7	730x800x600
		4	95 33 **4 160**	40,0	56,0	730x800x600
B8	2000A	3	95 33 **3 200**	51,3	67,3	730x800x600
		4	95 33 **4 200**	62,2	78,2	730x800x600
	2500A	3	95 33 **3 250**	51,3	67,3	730x800x600
		4	95 33 **4 250**	62,2	78,2	730x800x600
	3200A	3	95 33 **3 320**	61,6	77,6	730x800x600
		4	95 33 **4 320**	75,9	91,9	730x800x600

5.3.5. CE marking

The ATyS d complies the with the European directive for:

- The Electromagnetic compatibility no. 2004/108/CE dated 15th of December 2004.
- Low voltage directive no. 2006/95/CE dated 12th of December 2006.

5.3.6. Lead free process

- The ATyS d complies with the European directive for RoHS.

5.3.7. WEEE

The ATyS d is built in accordance with 2002/96/CE directive:

5.3.8. EMC standard

The ATyS d is designed and built in accordance with IEC 60947-1 standards
(Products intended to be installed in an «Industrial, Commercial and/or Residential Environment» therefore respecting both Class A as well as Class B EMC requirements).

Description	Std (IEC)	Requirement (criteria)
Conducted	CISPR 11	Class B
Radiated	CISPR 11	Class B
ESD contact	61000-4-2	4KV (B)
ESD air	61000-4-2	8KV (B)
Electromagnetic field	61000-4-3	10V/m (A)
RF Conducted	61000-4-6	10V (A)
Burst	61000-4-4	2KV (B) power 1KV (B) control
Surge differential	61000-4-5	1KV (B)
Surge Common	61000-4-5	2KV (B)

5.4. ATyS d ACCESSORIES AVAILABLE

BRIDGING BARS
To connect switch I & II load terminals together.

TERMINAL SHROUDS (125 TO 630 A)
Incoming and outgoing protection against direct contact with the connection terminals or parts. Cannot be mounted in the rear position at the same time as the voltage sensing and power outlet kit or the bridging bars.

Can be mounted top or bottom, in front or in rear position.

TERMINAL SCREENS
Incoming and outgoing protection against direct contact with the connection terminals or parts.

DOOR ESCUTCHEON PLATE
An accessory to be fixed onto a cabinet door to frame the controller part of flush mounted ATyS p transfer switches.

DC POWER SUPPLY (DC -> AC)
Allows a standard 230Vac ATyS d to be supplied through a 12/24Vdc Aux Power supply. Available for ratings up to 1600A

SUPPLEMENTARY AUXILIARY CONTACT (AC)
Pre-breaking and signaling of positions I and II: 1 additional auxiliary contact NO / NC auxiliary contact in each position. Included as standard for ratings from 2000 to 3200A. For Low level AC: please consult SOCOMEC.

KEY LOCK AUTO / MANUAL SELECTOR SWITCH
The ATyS d mode selector switch is delivered with a rotary handle as standard. This can be replaced with a key lock. Download key lock assembly instructions for details.
Ref. 9599 1007.

RONIS KEY PADLOCKING ACCESSORIES
Locking of the electrical and manual operation by means of a RONIS EL11AP lock. Possibility of locking in all positions, if the “Padlocking in the 3 positions” option is ordered.

Not compatible with flush mounting.

PADLOCKING IN 3 POSITIONS
Allows locking of the operation in the 3 positions I, 0 and II.
(Factory fitted accessory)

CONTROL VOLTAGE TRANSFORMER
Allows a standard 230 V AC device to be supplied with 400 VAC.

MOUNTING SPACERS (125 TO 630 A)
Raises the device’s terminals 10 mm away from the backplate or frame

REMOTE INTERFACES D10
Remote Display: Allows source supply state and switch positions to be displayed remotely. (LED display)

Typically door mounted or ≤3m away from the ATyS.

COMMUNICATION CABLE
RJ 45 communication cable (3m long) for use with the D10 remote display/controller or Ethernet modules.

Others:
Refer to the end of this instruction manual or the latest SOCOMEC product catalogue.
(Downloadable from www.socomec.com)

5.4.1. INSTALLATION

5.5. Product dimensions

5.5.1. Dimensions: Frame B3 to B5 (125A to 630A)

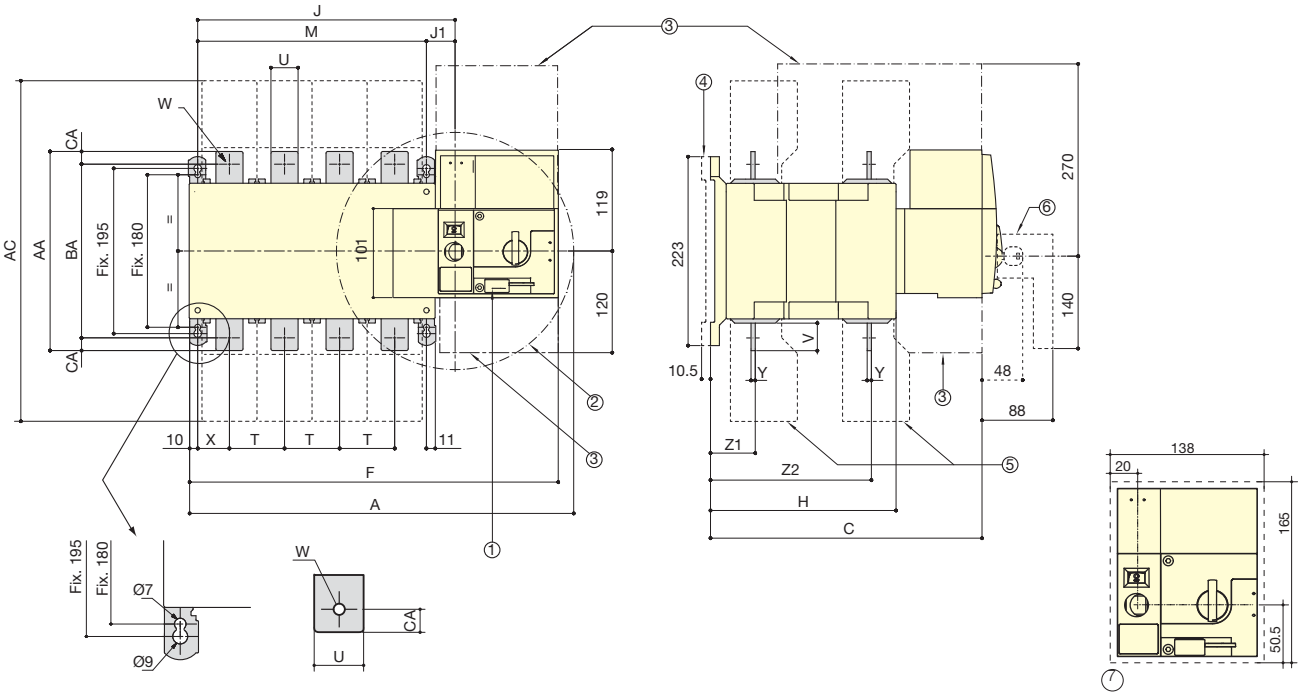

1. Padlocking Facility: Locking bracket for up to 3 padlocks of dia. 4 – 8mm
2. Emergency manual operation: Maximum operating radius with an operating angle of 2x 90°
3. Connection and disconnection area
4. Mounting stand off with spacer accessory
5. Phase Barriers
6. Emergency removable handle
7. Flush mounting cutout dimensions for front door

CAUTION	To consider the space required for manual operation and wiring. (When using the ATyS d emergency handle: note 2).

Rating (A)	Overall dimensions			Terminal shrouds	Body						Switch mounting		Connection											
	A 3p.	A 4p.	C	AC	F 3p.	F 4p.	H	J 3p.	J 4p.	J1	M 3p.	M 4p.	T	U	V	W	X 3p.	X 4p.	Y	Z1	Z1	AA	BA	CA
125	304	334	244	233	286.5	317	151	154	184	34	120	150	36	20	25	9	28	22	3.5	38	134	135	115	10
160	304	334	244	233	286.5	317	151	154	184	34	120	150	36	20	25	9	28	22	3.5	38	134	135	115	10
200	304	334	244	233	286.5	317	151	154	184	34	120	150	36	20	25	9	28	22	3.5	38	134	135	115	10
250	345	395	244	288	328	378	152	195	245	35	160	210	50	25	30	11	33	33	3.5	39.5	133.5	160	130	15
315	345	395	244	288	328	378	152	195	245	35	160	210	50	25	30	11	33	33	3.5	39.5	133.5	160	130	15
400	345	395	244	288	328	378	152	195	245	35	160	210	50	35	35	11	33	33	3.5	39.5	133.5	170	140	15
500	394	454	321	402	377	437	221	244	304	34	210	270	65	45	50	13	42.5	37.5	5	53	190	260	220	20
630	394	454	321	402	377	437	221	244	304	34	210	270	65	45	50	13	42.5	37.5	5	53	190	260	220	20

All dimensions in mm

5.5.2. Dimensions: Frame B6 & B7 (800A to 1600A)

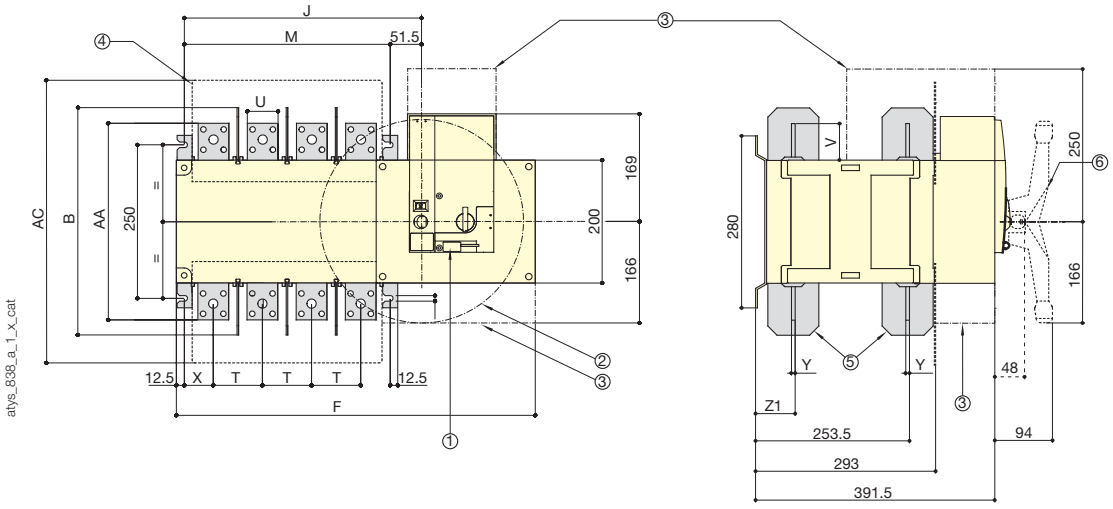

800 to 1000 A

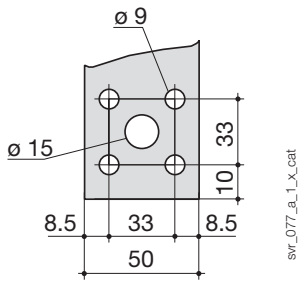

1250 A

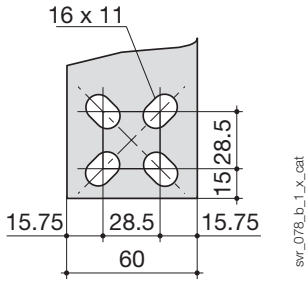

1600 A

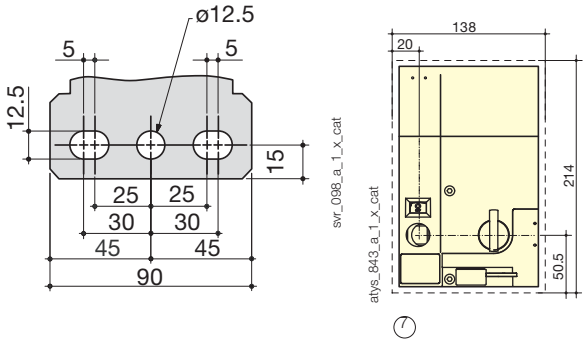

1. Padlocking Facility: Locking bracket for up to 3 padlocks of dia. 4 – 8mm
2. Emergency manual operation: Maximum operating radius with an operating angle of 2x 90°
3. Connection and disconnection area
4. Mounting stand off with spacer accessory
5. Phase Barriers
6. Emergency removable handle
7. Flush mounting cutout dimensions for front door

CAUTION	To consider the space required for manual operation and wiring. (When using the ATyS d emergency handle: note 2).

Rating (A)	Overall dimensions	Terminal screens	Body				Switch mounting		Connection						
	B	AC	F 3p.	F 4p.	J 3p.	J 4p.	M 3p.	M 4p.	T	U	V	X	Y	Z1	AA
800	370	461	504	584	307	387	255	335	80	50	60.5	47.5	7	66.5	321
1000	370	461	504	584	307	387	255	335	80	50	60.5	47.5	7	66.5	321
1250	370	461	504	584	307	387	255	335	80	60	65	47.5	7	66.5	330
1600	380	531	596	716	399	519	347	467	120	90	44	53	8	67.5	288

All dimensions in mm

5.5.3. Dimensions: Frame B8 (2000A to 3200A)

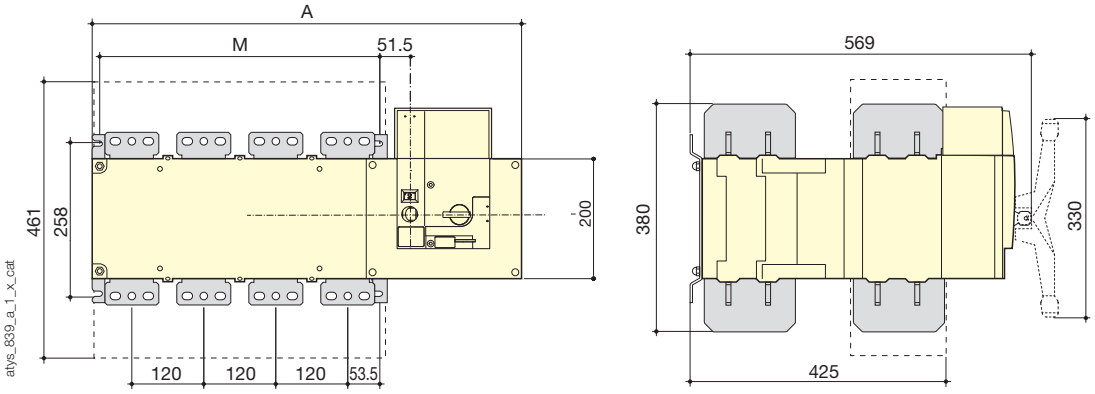

2000 to 3200 A

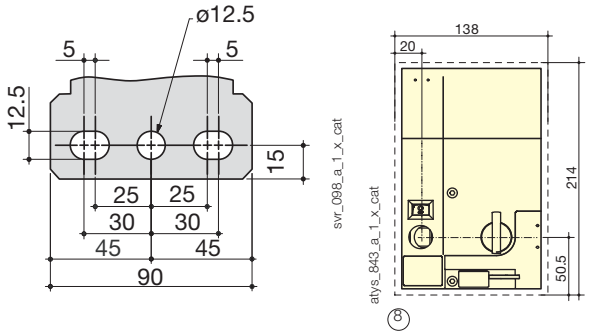

1. Padlocking Facility: Locking bracket for up to 3 padlocks of dia. 4 – 8mm
2. Emergency manual operation: Maximum operating radius with an operating angle of 2x 90°
3. Connection and disconnection area
4. Mounting stand off with spacer accessory
5. Phase Barriers
6. Emergency removable handle
7. Frame B8, (Dual frame) factory fitted power terminal connections
8. Flush mounting cutout dimensions for front door

CAUTION	To consider the space required for manual operation and wiring. (When using the ATyS p emergency handle: note 2).

Rating (A)	Overall dimensions		Switch mounting	
	A 3p.	A 4p.	M 3p.	M 4p.
2000 … 3200	596	716	347	467

All dimensions in mm

5.6. Mounting orientation

	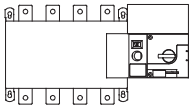	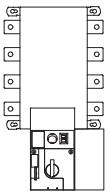	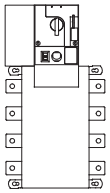	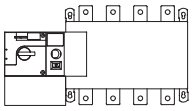
125A to 630A	Recommended	OK	Not Allowed	Ok
800A to 3200A	Recommended	Not Allowed	OK	Ok

CAUTION	Always install the product on a flat and rigid surface.

5.7. Assembly of customer mounted accessories

DANGER	Never handle any customer mounted accessories while there may be the risk of voltage being or becoming present.

5.7.1. Bridging bar installation

125A to 630A

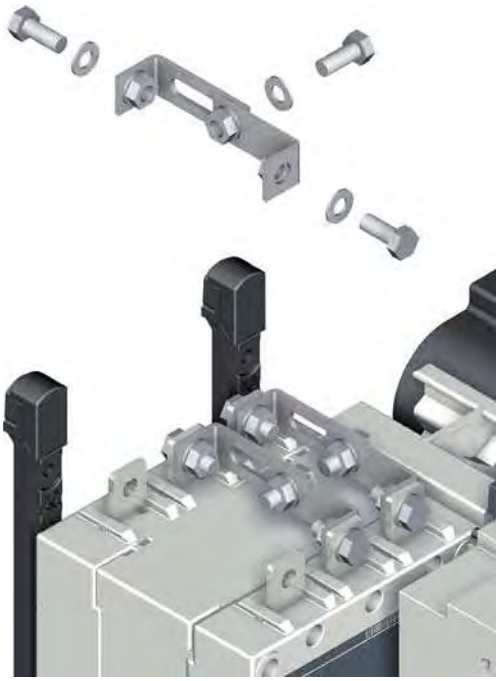

800A to 1600A

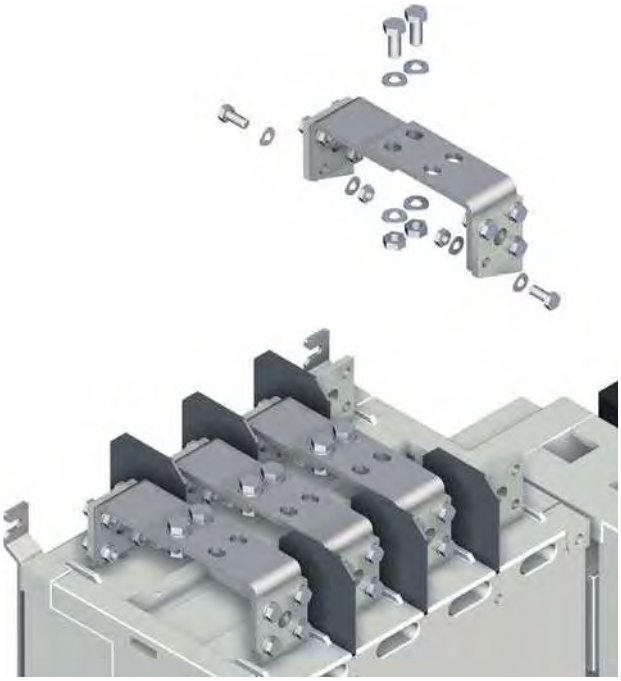

t is possible to mount the bridging bars on either side of the switch

Recommended tightening torque:	Maximum tightening torque:
M6: 4,5 N.m M8: 8,3 N.m M10: 20 N.m M12: 40 N.m	M6: 5,4 N.m M8: 13 N.m M10: 26 N.m M12: 45 N.m

5.7.2. Copper bar connection kits (2000A to 3200A : Frame B8)

Conditions of use of these products may lead to a derating.

SOCOMEC "Application guide"

www.socomec.com

1 I th = 2000 A

3 P 4 P

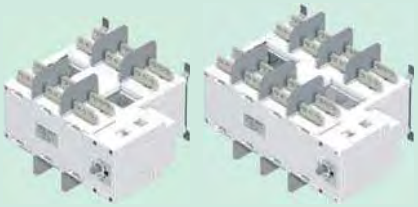

2 I th = 2500 A

3 P 4 P

3 I th = 3200 A

3 P 4 P

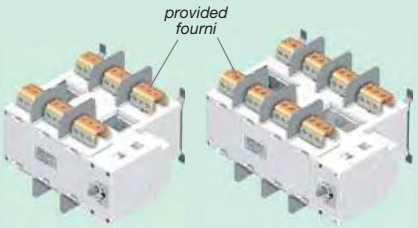

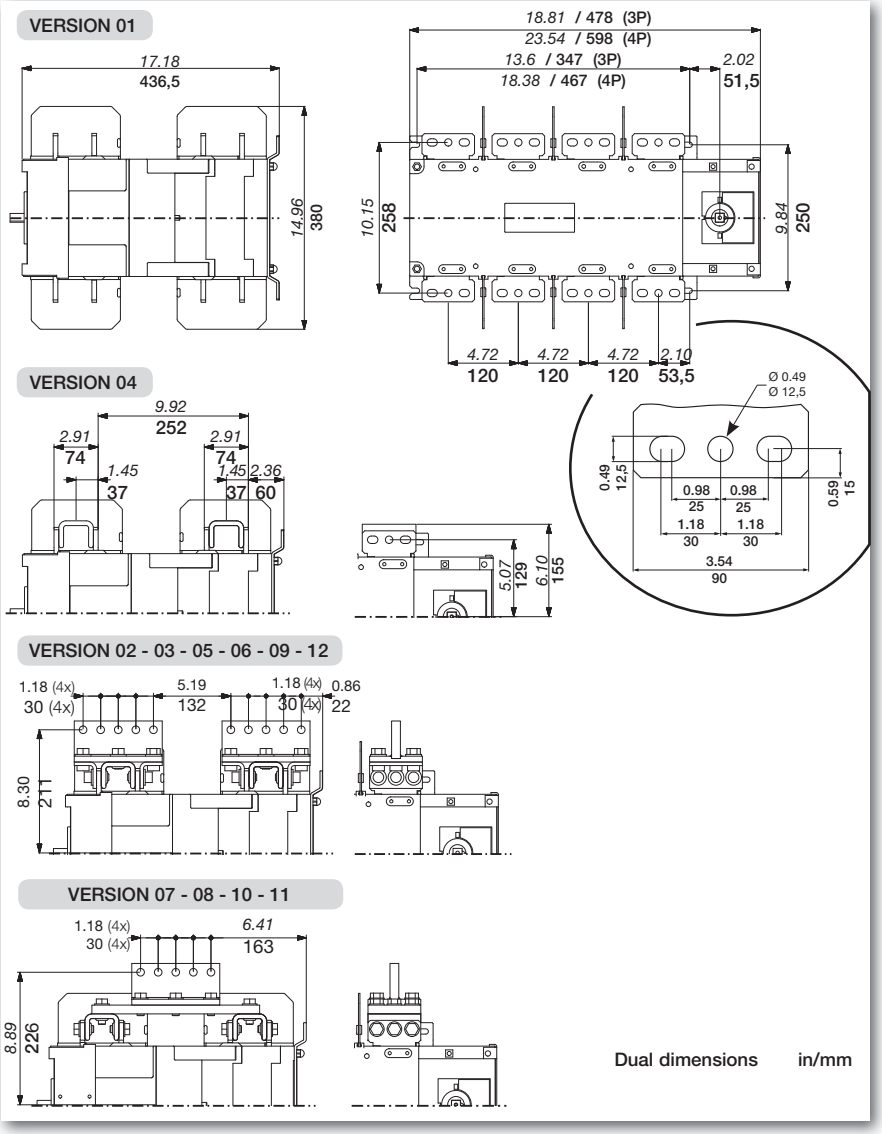

Data for Bolts, Nuls and Washers for Busbar Connections.

TO BE SUPPLIED BY OTHERS

VERSION	708 lb-in 80 Nm	Rondelle contact MOY. M M12 NFE 25 511	H M12
01	H M12-35 6.8 - 6 x	12 x	6 x
02	H M12-55 6.8 - 3 x	6 x	3 x
03	H M12-55 6.8 - 5 x	10 x	5 x
04	A H M12-35 6.8 - 3 x	3 x	-
	B H M12-45 6.8 - 3 x	3 x	-
05	H M12-65 6.8 - 3 x	6 x	3 x
06	H M12-65 6.8 - 5 x	10 x	5 x
07	H M12-55 6.8 - 3 x	6 x	3 x
08	H M12-55 6.8 - 5 x	10 x	5 x
09	H M12-55 6.8 - 10 x	20 x	10 x
10	H M12-65 6.8 - 3 x	6 x	3 x
11	H M12-65 6.8 - 5 x	10 x	5 x
12	H M12-65 6.8 - 10 x	20 x	10 x

Connection reference numbers and contents:

x 1

included with 3200A product as standard

2619 1200

708 lb-in 80 Nm x 6

2699 1200

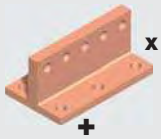

x 1

+

708 lb-in 80 Nm x 6

2629 1200

x 2

+

x 6

708 lb-in 80 Nm

2639 1200

x 1

+

708 lb-in 80 Nm x 6

4109 0250

x 1

+

708 lb-in 80 Nm x 6

4109 0320

Note: Reference numbers and quantity given above and below are for one connection and per pole.
For a full set multiply the quantity indicated by the number of poles (3 or 4 pole) and then multiply by 2 (N° of switches)

5.7.3. Incoming copper bar connection kit assembly

2000A – 2500A (Minimum Cu bar section for Ith 2000A 3x100x5mm; and for Ith 2500A 4x100x5mm)

VERSION 01

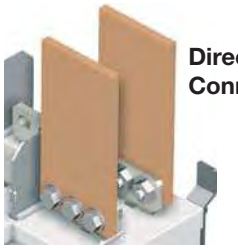

Direct Connection

VERSION 02

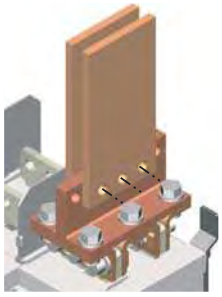

VERSION 03

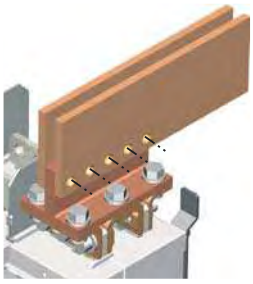

V2 & V3
Kit :
2619 1200 x 1
2629 1200 x 1
2639 1200 x 1

3200A (Minimum Cu bar section 3x100x10mm)

VERSION 04

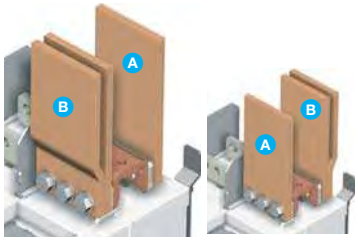

VERSION 05

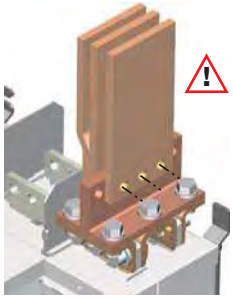

2900A Max

VERSION 06

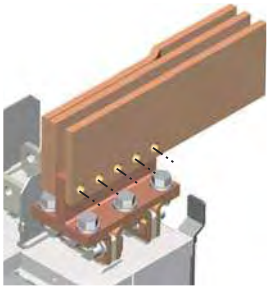

Connection bar 2619 1200 included with 3200A

V5 & V6
Kit :
2629 1200 x 1
2639 1200 x 1

5.7.4. Outgoing bridge connection assembly

2000A – 2500A (Minimum Cu bar section for Ith 2000A 3x100x5mm; for Ith 2500A 4x100x5mm)

VERSION 07

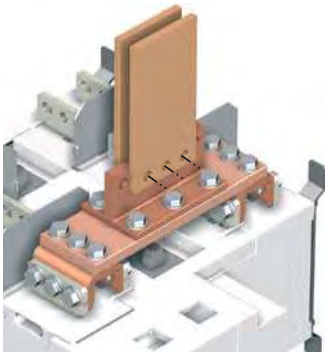

VERSION 08

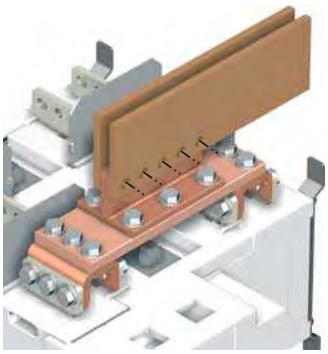

VERSION 09

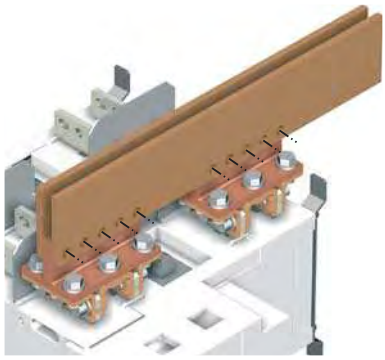

V7 & V8
Kit :
2619 1200 x 2
2699 1200 x 2
2629 1200 x 1
4109 0250 x 1

V9
Kit :
2619 1200 x 2
2629 1200 x 2
2639 1200 x 2

3200A (Minimum Cu bar section 3x100x10mm)

VERSION 10

2900A Max

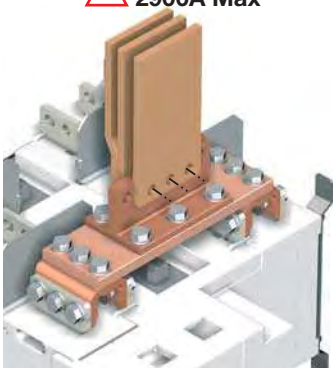

VERSION 11

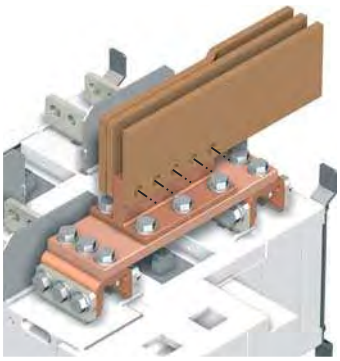

VERSION 12

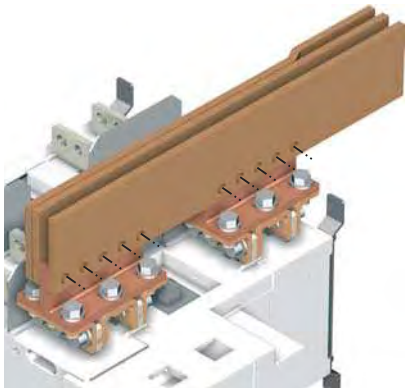

Connection bar 2619 1200 included with 3200A

V10 & V11
Kit :
2629 1200 x 1
4109 0320 x 1

V12
Kit :
2629 1200 x 2
2639 1200 x 2

5.7.5. Terminal shrouds

Available from 125A to 630A
Frame B3 to Frame B5:

- Upstream, downstream, front or rear mounting.
- When fitted with bridging bars only the front terminal shrouds are to be installed.

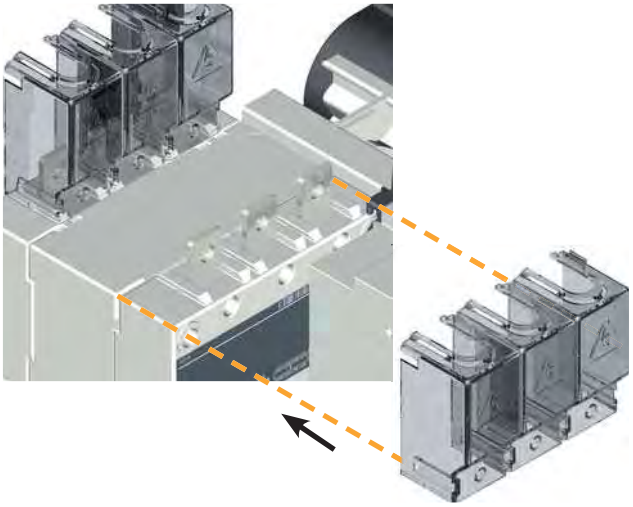

5.7.6. Terminal screens

125A to 630A

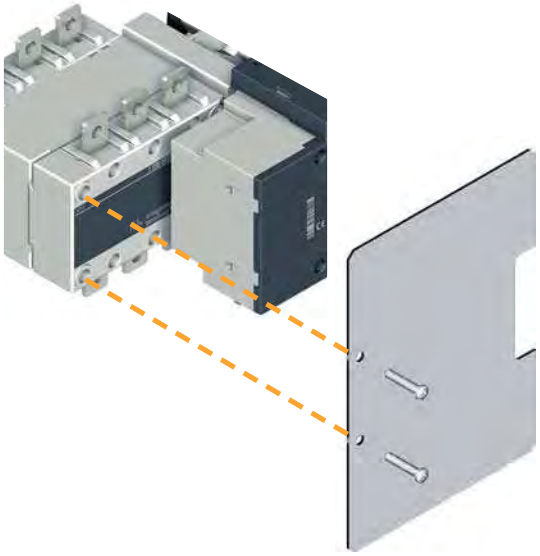

500A to 1600A

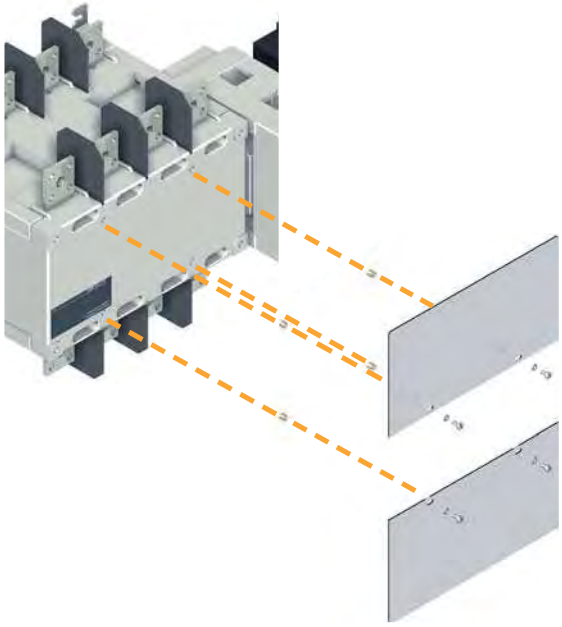

2000A to 3200A

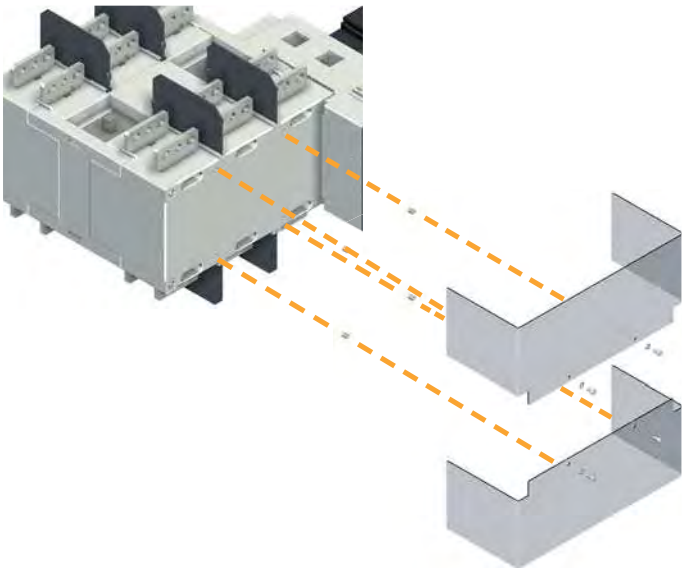

5.7.7. External Power supply (400VAC - 230VAC)

Power Transformer intended for 400VAC, Phase to Phase voltage applications that do not provide the availability of a neutral conductor. Transformer data: 400VAC – 230VAC: 200VA.
In this case the ATyS d will require 2 transformers to be connected as shown below.

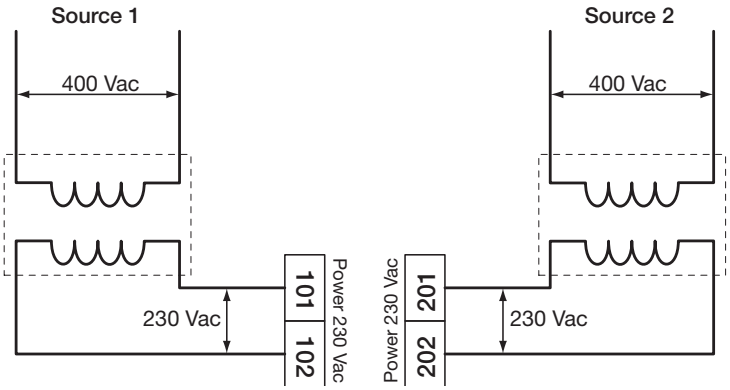

5.7.8. Raised mounting spacers

Available for 125A to 630A ratings only
Frames B3, B4 and B5

1 set including 2 spacers raises the device's terminals 10mm away from the bottom of the enclosure or frame on which the device is mounted. These may also be used to replace the original mounting spacers.

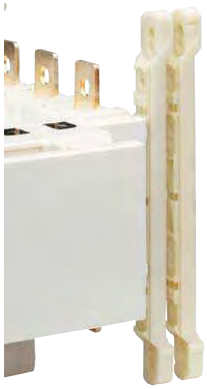

5.7.9. Padlocking key interlocks

Intended for locking the electrical control and the backup control in position 0 using a RONIS EL11AP lock. As standard, key locking is in the 0 position.
Optionally and when including the option “padlocking in 3 positions” key locking will be in positions I, 0 or II

125A to 630A

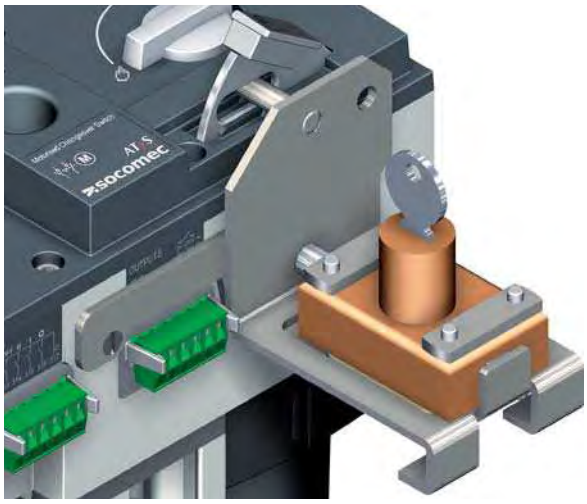

800A to 3200A

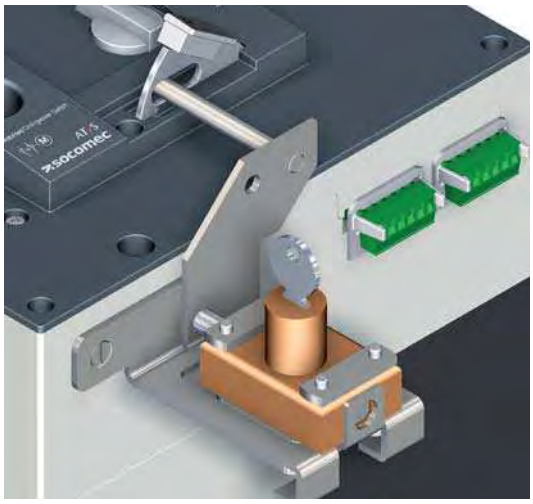

5.7.10. Additional auxiliary contacts

Intended for pre breaking and signaling of positions I and II:
A maximum of 2 NO/NC additional auxiliary contacts can be fitted for each position. (Customer assembly may be required.)

125A to 630A (Optional)

800A to 1600A (Optional)
2000A to 3200A (Standard)

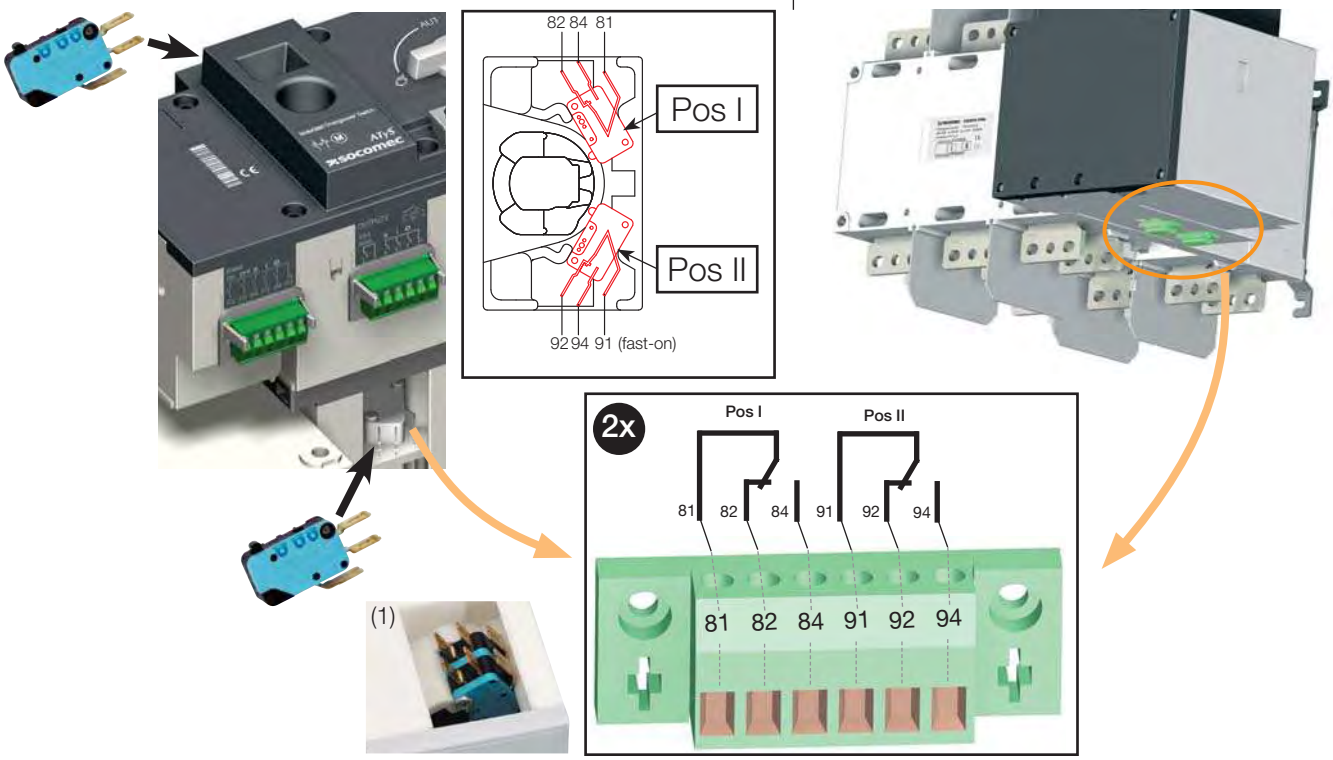

(1) When mounting one auxiliary contact on position I or II, use the short screws provided.
When mounting two auxiliary contacts on position I or II, use the long screws provided.

6. CONNECTIONS

6.1. Power circuits

6.1.1. Cable or bar connections

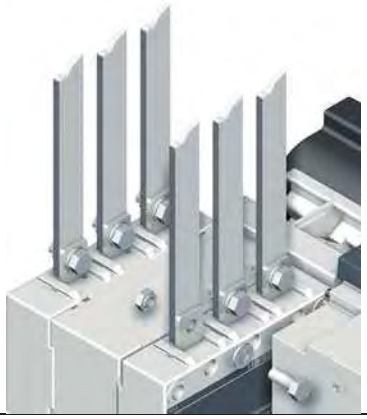

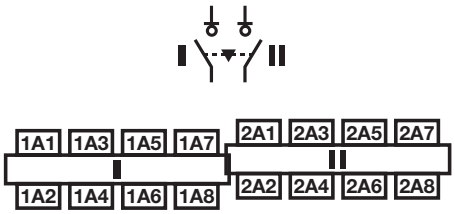

Recommended tightening torque: • M6: 4,5 N.m • M8: 8,3 N.m • M10: 20 N.m • M12: 40 N.m	Maximum tightening torque: • M6: 5,4 N.m • M8: 13 N.m • M10: 26 N.m • M12: 45 N.m

6.1.2. Power connection terminals

125A to 630A

Refer to section “Product dimensions”, page 20 for power connection terminals up to 630A.

800A to 1000A

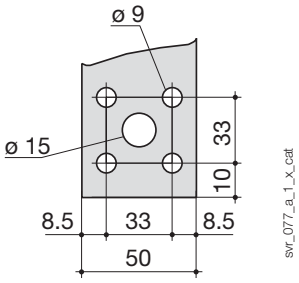

1250A

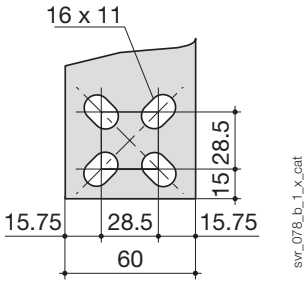

1600A to 3200A

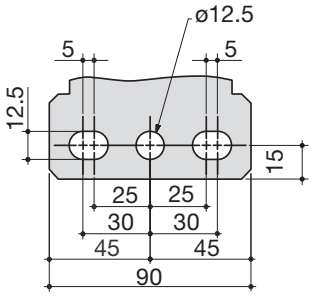

6.1.3. Power connection cross-section

	B3			B4			B5		B6			B7	B8		
	125A	160A	200A	250A	315A	400A	500A	630A	800A	1000A	1250A	1600A	2000A	2500A	3200A
Minimum cables section Cu (mm²), Ith	50	70	95	120	185	240	2x150	2x185	2x240	-	-	-	-	-	-
Minimum bars section Cu (mm²), Ith	-	-	-	-	-	-	2x30 x5	2x40 x5	2x50 x5	2x60 x5	2x80 x5	2x100 x5	3x100 x5	4x100 x5	3x100 x10
Maximum cables section Cu (mm²)	50	95	150	150	240	240	2x300	2x300	2x300	4x185	4x185	6x185	-	-	-
Maximum bars width Cu (mm)	25	25	25	32	32	32	50	50	63	63	63	100	100	100	100

Note for all ratings: Take into account the connection cable lengths and/or others environmental specific operating conditions.

6.2. Control circuits

6.2.1. Typical ATyS d wiring

Example: Control wiring for a 400VAC application having a 3 phase and neutral supply.

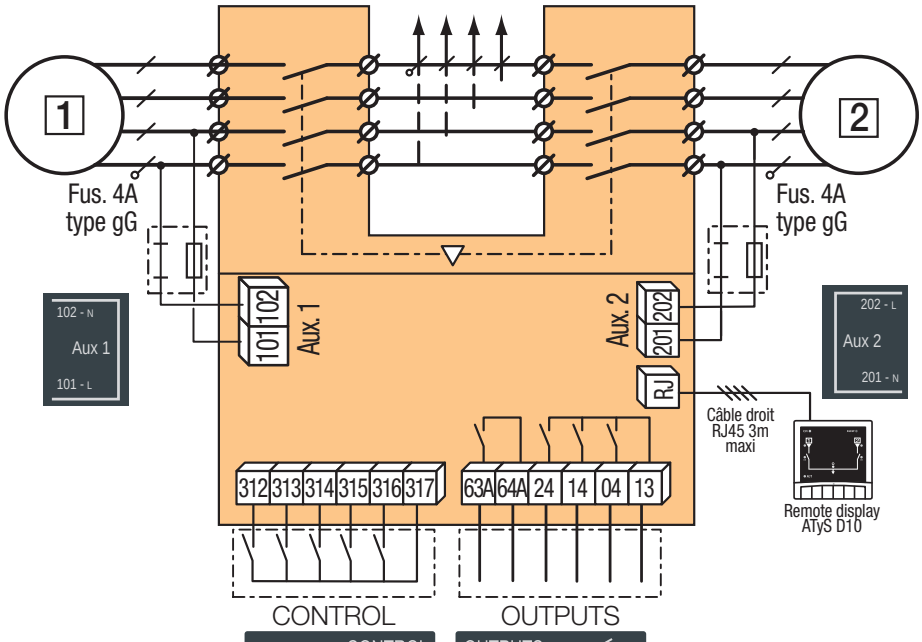

Control Inputs from :
- Remote pushbuttons
- PLC Controller
- ATS controller

(ATS such as the ATyS C30 or ATyS C40)

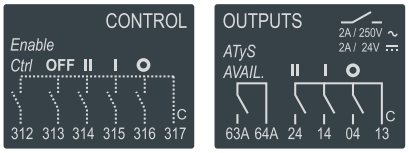

CAUTION	Verify that the Auxiliary power supply feeding terminals 301 and 302 are within the limits of 208VAC -> 277VAC ±20%.
DANGER	Do not handle any control or power cables connected to the ATyS when voltage may be present.

6.2.2. ATyS d input and output contacts

6.2.2.1. Terminal denomination, description and characteristics.

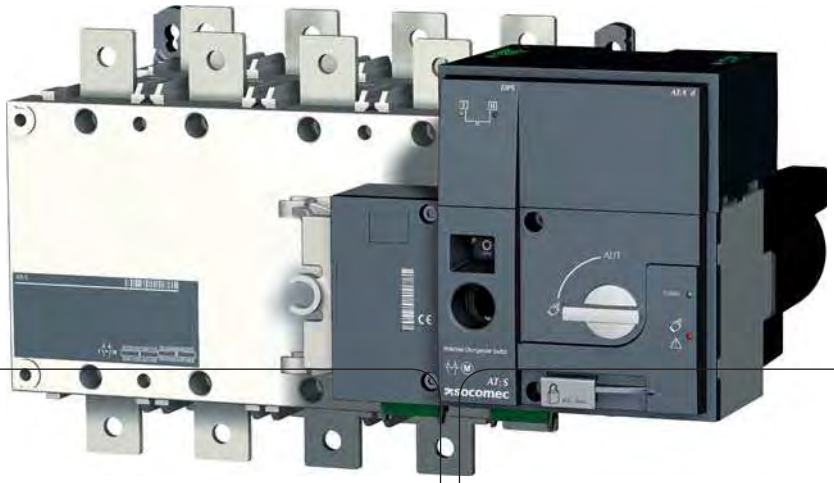

All pressure on the connector pins is to be avoided during wiring of the auxiliary cables

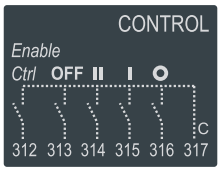

Control Enable:	312
Override to OFF:	313
Sw to Pos II I/P:	314
Sw to Pos I I/P:	315
Sw to Pos 0 I/P:	316
Common:	317

Prod Avail Common	63A
Prod Avail O/P:	64A
Pos II Aux Contact:	24
Pos I Aux Contact:	14
Pos 0 Aux Contact:	04
Common:	13

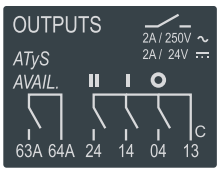

Aux Supply 1

Power - 230V
208-277 Vac ±20%
(166 - 332Vac)

Aux Supply 2

Power - 230V
208-277 Vac ±20%
(166 - 332Vac)

RJ45 to D10

Denomination	Terminal	Description	Characteristics	Recommended Cable Section
Aux Power supply Input	101	Power supply 1 – L	208 - 277VAC ± 20% : 50/60Hz	1.5mm
	102	Power supply 1 – N		
	201	Power supply 2 – L		
	202	Power supply 2 – L		
Control Inputs	312	Remote Control Mode Enable when closed with 317	Attn: Do not connect to any Power supply Max cable length 100m	1.5mm
	313	Position 0 order if closed with 317. (Priority order input forcing the product to remote control mode and 0 position)		
	314	Position II order if closed with 317		
	315	Position I order if closed with 317		
	316	Position 0 order if closed with 317		
	317	Common control terminal for 312 - 316 ATyS d (Specific Voltage Supply)		
Signalisation Outputs	13	Common I - 0 - II for Aux Contacts	Dry Contacts 2A AC1 / 250V	1.5mm
	04	Aux Contact Position 0 - Normally Open Contact		
	14	Aux Contact position I : Normally Open Contact		
	24	Aux Contact position II : Normally Open Contact		
	63A	Product Available : Normally Open Contact. Closed when the ATyS d is in Auto mode and motorisation is operational. *(No Fault powered and ready to changeover)*		
	64A			
Additional Aux Contact *Included with 2000A to 3200A* *Optional for 800A to 1600A*	81	Common for Aux Contacts positions I	Dry Contacts 2A AC1 / 250V	1.5 – 2.5mm
	82	Aux Contact position I: Normally Closed Contact		
	84	Aux Contact position I: Normally Open Contact		
	91	Common for Aux Contacts positions II		
	92	Aux Contact position II: Normally Closed Contact		
	94	Aux Contact position II: Normally Open Contact		

CAUTION	Do not connect terminals 312 to 317 to any power supply. These order inputs are powered through terminal 317 and external dry contacts ONLY.

6.2.3. ATyS d RTSE + ATS Controllers type ATyS C30 and ATyS C40

Refer to the relevant ATS controller instruction manual for ATyS C30 and ATyS C40 details

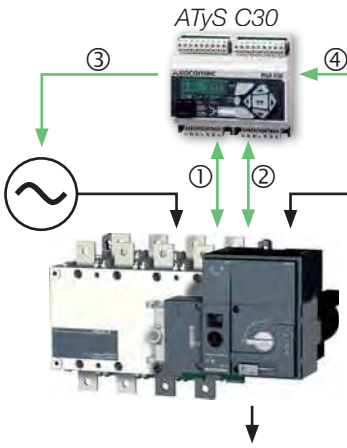

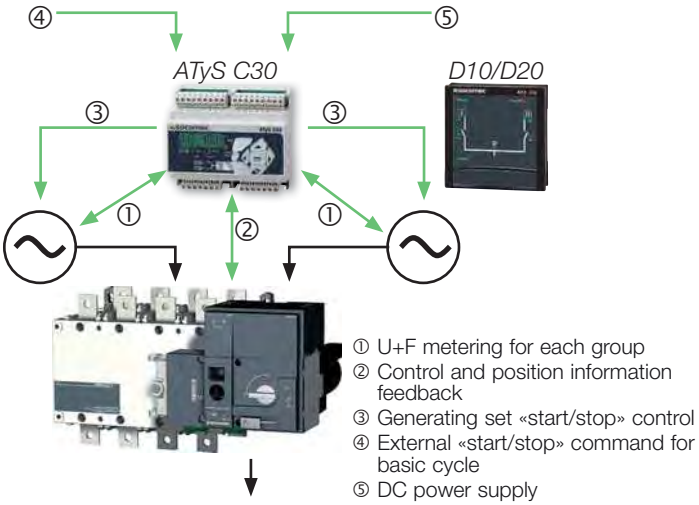

7. ATyS d OPERATING MODES

The ATyS d includes 3 safe and distinct operating modes through a selector switch located on the front of the product. As standard the ATyS d is delivered with a selector switch however a key lock type selector swith is available on option. (To be specified at order by the addition of “–K” at the end of the standard reference).

The modes of operation are as follows:

- Auto Mode: “Remotely operated transfer switching”
- Manual Mode: “Local emergency manual operation”
- Locked Mode: “Secure locked padlocking facility”

AUT MODE		AUT	**AUTO MODE:** • Activates the remote control inputs and the ATS controller automation. • Inhibits the padlocking facility • Inhibits the insertion of the manual operation handle when in AUT Mode AUTO Mode position is inhibited when padlocked or when the handle for manual operation is inserted into the ATyS d.
MODE	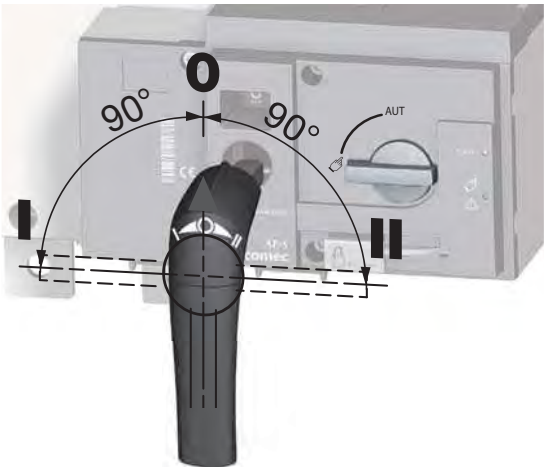	AUT	**MANUAL MODE:** **(Not Padlocked)** • Inhibits the control inputs. • Allows to insert the handle for emergency manual operation. • Allows padlocking in O Position. *(With the handle for manual operation removed)* Turning the selector switch to from AUT and back to AUT resets a fault state.
MODE		AUT	**MANUAL MODE:** **(Padlocked)** • Inhibits the control inputs. • Inhibits insertion of the emergency handle. • Allows padlocking when in O Position. POS 0 Padlocking in position I - O and II is possible when the optional function is included in the ATyS d. (Refer to product catalogue)

WARNING	Depending on the state of the ATyS d the ATS automation may change the switch position as soon as the mode selector is switched to AUT. This is a normal operation.

7.1. Manual operation

7.1.1. Emergency manual operation

The ATyS d can be manually operated as a “Manual Transfer Switch Equipment – MTSE” whilst retaining the electrical characteristics and performance of the power switching function. This function is usually used in case of emergencies or during maintenance.

To operate the ATyS d manually ensure that no live parts are accessible, turn the front selector switch into the manual position (see page 14) and insert the handle (see page 14) into the emergency handle shaft location hole provided (see «5.2. Product identification», page 15).

Turn the handle 90° clockwise or anti-clockwise (depending on the position to be reached) for each consecutive change in position. I -> O -> II -> O -> I.

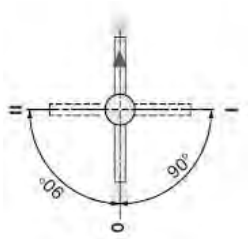

CAUTION
Ensure to verify the product position and direction of rotation before effecting manual operation. Ensure to remove the handle from the product before changing the selector switch back to AUT position.

7.1.2. Padlocking

The ATyS d can be padlocked in the 0 position as standard whilst padlocking in positions I, O or II is available as a factory fitted option.

To padlock the ATyS d first ensure that the ATyS d mode selector switch is on Manual then ensure that the emergency manual operation handle is not inserted into the location hole. (Remove if inserted).

Pull the padlocking mechanism outwards to reveal the slot for inserting up to 3x dia. 4 - 8mm padlocks.

Padlock the device with approved quality padlocks of minimum diameter 4mm and maximum diameter of 8mm. A maximum of 3x 8mm padlocks may be padlocked onto the ATyS d to padlocking mechanism.

CAUTION	As standard, padlocking is only made possible in the “O position”, when in manual mode and with the emergency handle not inserted.

7.2. Electrical operation

7.2.1. Power supply

The ATyS d includes a dual power supply and is to be powered between terminals 101 - 102 and 201 - 202 (2 different supplies - main & alternative) within the limit of:

- 2x 208 – 277Vac ±20% (166 – 332Vac)
- 50/60Hz ±10%

Current Input:

- 10mA (Standby mode)
- 15A max (Switching mode)

Surge Protection :

- Vin_sg: 4 / 8KV – 1.2/50µs according to IEC 61010-1

Terminal connector:

- Minimum 1.5mm²
- Maximum 2.5mm²

7.2.2. Fixed inputs

7.2.2.1. Description

The ATyS d includes for 5 off fixed inputs through a 6 pin connector installed on the motorisation module. No additional power supply should be used on these contacts as the inputs MUST be used with the common supply taken from terminal 317.

At least one of the ATyS d aux power supplies (101 – 102 or 201 - 202) must be available to activate inputs 312 to 317.

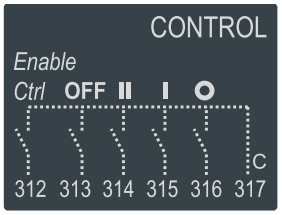

Pulse duration for activation of contact inputs: ≥ 60ms.

- **Pin 312:** Remote Control Mode Enable when closed with 317.
  This contact must be closed with 317 so as to activate all control inputs except for 313 that takes priority and is active immaterial of the state of input 312.
- **Pin 313:** Position 0 order if closed with 317 when in AUTO. **(Force ATyS d to the OFF Position).**
  This is a “Priority Order Input” meaning that when closed with 317 it takes priority over all other electrical commands. The ATyS d will remain in 0 position as long as the contact 313 – 317 remains closed. Once the contact is open the ATyS d is ready to receive new orders. This contact order is independent of other inputs and is also enabled without 312 connected to 317. Impulse duration to activate and switch to position O is a minimum of 60ms.
- **Pin 314:** Position II order if closed with 317.
  This contact is active with the ATyS d in AUT mode with contact 312 – 317 closed and 313 – 317 open. Impulse duration to activate and switch to position II is a minimum of 60ms.
- **Pin 315:**- Position I order if closed with 317.
  This contact is active with the ATyS d in AUT mode with contact 312 – 317 closed and 313 – 317 open. Impulse duration to activate and switch to position I is a minimum of 60ms.
- **Pin 316:**- Position 0 order if closed with 317.
  This contact is active with the ATyS d in AUT mode with contact 312 – 317 closed and 313 – 317 open. Impulse duration to activate and switch to position O is a minimum of 60ms. For contactor logic maintain contacts on between terminal 316 and 317.
- **Pin 317:**- Common for inputs 312 to 316.

7.2.2.2. Technical data

	Motorisation Module
Input Qty	5
Direct Current Iin	0.35 to 0.5mA
Line resistance	1kΩ
Line length	100m (Min. wire 1.5mm² #16AWG)
Pulse duration	60ms
Power per Input	0.06VA
Surge protection Vin_sg	4.8kV (1.2/50µs surge)
ESD withstand voltage (Contact/air)	2/4kV
Insulation (Common mode)	4.8kVAC (Between I/P and all common parts)
Terminal connector	1.5mm² minimum / 2.5mm² max

7.2.2.3. Remote control logic

Remote switching operation can be driven in AUT mode by external volt free contacts as described above using input contacts 312 to 317.

Depending on the wiring configuration there are two types of logic that may be applied to the ATyS d.

- Impulse logic or
- Contactor logic.

In remote control, the ATyS d inputs give priority to orders I and II over 0 therefore contactor logic can be implemented by simply bridging terminals 316 and 317.

(NOTE: 312 – 317 closed / Force ATyS d to OFF Position, takes priority over all other orders no matter of the control logic used.)

Impulse logic:

The ATyS d is driven to a stable position (I – O – II) after receiving an impulse order.

- A switching command of at least 60 ms is necessary to initiate the switching operation.
- Orders I and II have priority over order 0.

Note: The logic diagrams exclude the transfer times.

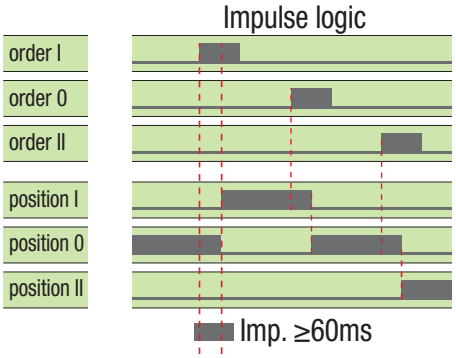

(Note : Excludes position switching delays)

Contactor Logic :

The ATyS is driven to a specific position (I or II) for as long as the order is maintained.

- Order O is maintained. (Bridge 316 – 317)
- Orders I and II have priority over order 0.
- Orders I and II have equal priority. *(1st order received is held until no longer maintained).*
- If order I or II disappears, the device returns to zero position. *(With the power supply available).*

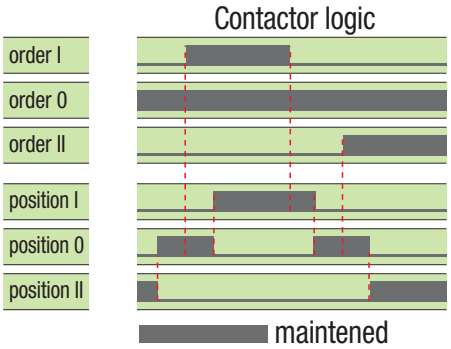

(Note : Excludes position switching delays)

7.2.3. Fixed outputs - Dry contacts

7.2.3.1. Description

As standard, the ATyS d is equipped with four fixed outputs located on the motorisation module.

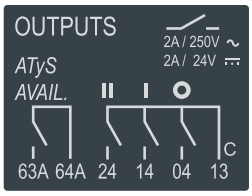

(Dry contacts to be powered by the user).

7.2.3.2. Position auxiliary contact

The ATyS d is equipped with integrated position (I – O – II) auxiliary contact outputs through 3 off micro switches.

Pins 13, 04, 14, 24
(Normally Open contacts with pin 13 as common)

7.2.3.3. ATyS d Product available output (motorisation)

Pin 63A – 64A
(Normally Open contact that is held closed when the motorisation is available).
This contact gives constant feedback about the product's availability and it's capacity to transfer from the main supply to the alternative. The feedback given is relative to the motorisation module excluding the ATS controller that may be monitored separately.

The ATyS d performs a self diagnostics test on the motorisation module at startup, when put from Manual -> Auto and then every 5 minutes. This test ensures that the ATyS d is operational in terms of control inputs. Should one of the tests fail, a second test is performed to reconfirm the error state. Should the ATyS d motorisation module become unavailable, contact 63A – 64A are opened, the power/ready LED's are switched off, and the fault LED is activated. The fault LED will remain active for as long as sufficient power is available and the fault condition is not reset. The fault is reset when the product is switched from AUT -> Manual -> Auto mode.

ATyS d (Motorisation) Product Available / Unavailable Watchdog relay will open for any of the following reasons below: For added security, "Product Availability" is informative and does not necessarily inhibit motor operation.

Product Unavailable + Warning LED Condition:	**Inhibition**
Product in manual mode	Yes
Motor not detected (Autotest)	No
Control voltage out of range	Yes
Operating factor fault active (N° of operations / min)	Yes
Powerfail active	Yes
Customer input autotest failed	No
Invalid product customisation	No
Abnormal switching when not in manual mode	Yes
Requested position not reached	Yes
Locked mode active when not in manual mode	Yes
External Fault -> User input	No
Unexpected current flowing through the motor when idle	Yes

Sampling rate for the above is every 10 ms

Exception: motor detection sampling rate is every 5 min

7.2.3.4. Technical data

Auxiliary Contact Quantity	4
Configuration	NO
Mechanical Endurance	100k cycles
Response Time	5 – 10 ms
Startup duration	200ms
Rated Voltage / Switching Voltage	250VAC
Rated Current	2A
Surge protection Vin_sg:	4.8kV (1.2/50µs surge)
ESD withstand voltage (Contact/air):	2/4kV
Dielectric Strength contact/parts:	4.8kVAC (Reinforced Insulation)
Insulation:	4.8KVAC
Output Terminal:	1.5mm^2 minimum / 2.5mm^2 maximum

8. CHARACTERISTICS

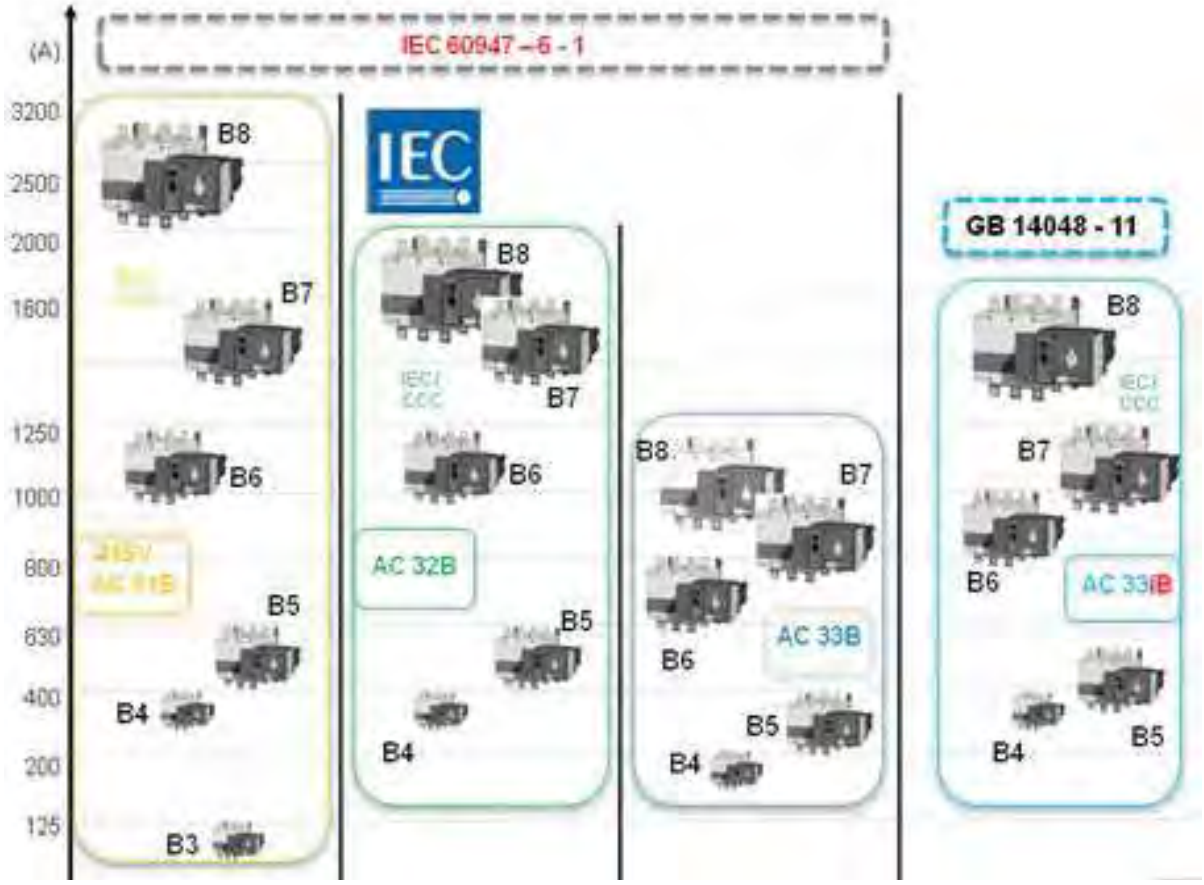

Characteristics according to IEC 60947-3 and IEC 60947-6-1

125 to 630 A / B3 to B5

Thermal current I_{th} at 40°C		125 A	160 A	200 A	250 A	315 A	400 A	500 A	630 A
Frame size		B3	B3	B3	B4	B4	B4	B5	B5
Rated insulation voltage U_i (V) (power circuit)		800	800	800	1000	1000	1000	1000	1000
Rated impulse withstand voltage U_{imp} (kV) (power circuit)		8	8	8	12	12	12	12	12
Rated insulation voltage U_i (V) (operation circuit)		300	300	300	300	300	300	300	300
Rated impulse withstand voltage U_{imp} (kV) (operation circuit)		4	4	4	4	4	4	4	4
Rated operational currents I_e (A) according to IEC 60947-6-1									
Rated voltage	**Utilisation category**	**A/B(1)**	**A/B(1)**	**A/B(1)**	**A/B(1)**	**A/B(1)**	**A/B(1)**	**A/B(1)**	**A/B(1)**
415 VAC	AC-31 B	125	160	200	250	315	400	500	630
415 VAC	AC-32 B				200	315	400	500	500
415 VAC	AC-33 B				200	200	200	400	400
Rated operational currents I_e (A) according to IEC 60947-3									
Rated voltage	**Utilisation category**	**A/B(1)**	**A/B(1)**	**A/B(1)**	**A/B(1)**	**A/B(1)**	**A/B(1)**	**A/B(1)**	**A/B(1)**
415 VAC	AC-20 A / AC-20 B	125/125	160/160	200/200	250/250	315/315	400/400	500/500	630/630
415 VAC	AC-21 A / AC-21 B	125/125	160/160	200/200	250/250	315/315	400/400	500/500	630/630
415 VAC	AC-22 A / AC-22 B	125/125	160/160	200/200	250/250	315/315	400/400	500/500	630/630
415 VAC	AC-23 A / AC-23 B	125/125	160/160	200/200	200/200	315/315	400/400	500/500	630/630
500 VAC	AC-20 A / AC-20 B	125/125	160/160	200/200	250/250	315/315	400/400	500/500	630/630
500 VAC	AC-21 A / AC-21 B	125/125	160/160	200/200	250/250	315/315	400/400	500/500	630/630
500 VAC	AC-22 A / AC-22 B	125/125	160/160	200/200	200/250	200/315	200/400	500/500	500/500
500 VAC	AC-23 A / AC-23 B	80/80	80/80	80/80	200/200	200/200	200/200	400/400	400/400
690 VAC	AC-20 A / AC-20 B	125/125	160/160	200/200	250/250	315/315	400/400	500/500	630/630
690 VAC	AC-21 A / AC-21 B	125/125	160/160	200/200	200/200	200/200	200/200	500/500	500/500
690 VAC	AC-22 A / AC-22 B	125/125	125/125	125/125	160/160	160/160	160/160	400/400	400/400
690 VAC	AC-23 A / AC-23 B	63/80	63/80	63/80	125/125	125/125	125/125	400/400	400/400
220 VDC(2)	DC-20 A / DC-20 B	125/125	160/160	200/200	250/250	315/315	400/400	500/500	630/630
220 VDC(2)	DC-21 A / DC-21 B	125/125	160/160	200/200	250/250	250/250	250/250	500/500	630/630
220 VDC(2)	DC-22 A / DC-22 B	125/125	160/160	200/200	250/250	250/250	250/250	500/500	630/630
220 VDC(2)	DC-23 A / DC-23 B	125/125	125/125	125/125	200/200	200/200	200/200	500/500	630/630
440 VDC(2)	DC-20 A / DC-20 B	125/125	160/160	200/200	250/250	315/315	400/400	500/500	630/630
440 VDC(2)	DC-21 A / DC-21 B	125/125	125/125	125/125	200/200	200/200	200/200	500/500	630/630
440 VDC(2)	DC-22 A / DC-22 B	125/125	125/125	125/125	200/200	200/200	200/200	500/500	630/630
440 VDC(2)	DC-23 A / DC-23 B	125/125	125/125	125/125	200/200	200/200	200/200	500/500	630/630
Fuse protected short-circuit withstand as per IEC 60947-3 at 690 VAC									
Prospective short-circuit current (kA rms)		100(3)	100(3)	50(3)	50	50	50	50	50
Associated fuse rating (A)		125	160	200	250	315	400	500	630
Circuit breaker protected short-circuit withstand with any circuit breaker that ensures tripping in less than 0.3s(4)									
Rated short-time withstand current 0.3s I_{cw} (kA rms)		12(3)	12(3)	12(3)	15	15	15	17	17
Rated short-circuit withstand without protection									
Rated short-time withstand current 60ms I_{cw} (kA rms) as per IEC 60947-6-1 at 415 VAC					10(5)	10(5)	10(5)	10	12.6
Rated short-time withstand current 1ms I_{cw} (kA rms) as per IEC 60947-3 at 690 VAC		7(3)	7(3)	7(3)	8	8	8	10	10
Rated peak withstand current (kA peak) as per IEC 60947-3 at 690 VAC		20	20	20	30	30	30	45	45
Connection									
Maximum Cu cable cross-section (mm²)		35	50	70	95	150	185	240	2 x 150
Minimum Cu busbar cross-section (mm²)									2 x 30 x 5
Maximum Cu cable cross-section (mm²)		50	95	120	150	240	240	2 x 185	2 x 300
Maximum Cu busbar width (mm)		25	25	25	32	32	32	50	50
Tightening torque mini / maxi (Nm)		9/13	9/13	9/13	20/26	20/26	20/26	20/26	20/26
Switching time (Standard setting)									
I - II or II - I (s)		0.75	0.75	0.75	1.3	1.3	1.3	1.3	1.3
I-0 or 0-II (s)		0.45	0.45	0.45	0.85	0.85	0.85	0.85	0.85
Duration of "electrical blackout" I - II (s)		0.3	0.3	0.3	0.6	0.6	0.6	0.6	0.6
Power supply									
min / max (VAC)		166/332	166/332	166/332	166/332	166/332	166/332	166/332	166/332
Control supply power demand									
Power supply 230 VAC inrush / nominal (VA) - ATyS		184/92	184/92	184/92	276/115	276/115	276/115	276/150	276/150
Power supply 230 VAC inrush / nominal (VA) - ATyS d, t, g, p		206/114	206/114	206/114	298/137	298/137	298/137	298/172	298/172
Mechanical characteristics									
Durability (number of operating cycles)		10 000	10 000	10 000	8 000	8 000	8 000	5 000	5 000
Weight ATyS 3/4 P (kg)		5.7 / 6.9	5.7 / 6.9	5.7 / 6.9	6.6 / 7.4	6.7 / 7.8	6.7 / 7.8	11.4 / 13.3	11.9 / 14.0
Weight ATyS d 3/4 P (kg)		6.3 / 7.5	6.3 / 7.5	6.3 / 7.5	7.2 / 8.0	7.3 / 8.4	7.3 / 8.4	12.0 / 13.9	12.5 / 14.6
Weight ATyS r, t, g, p 3/4 P (kg)		6.8 / 8.0	6.8 / 8.0	6.8 / 8.0	7.7 / 8.5	7.8 / 8.9	7.8 / 8.9	12.5 / 14.4	13.0 / 15.1

(1) Category with index A = frequent operation - Category with index B = infrequent operation.
(2) 3-pole device with 2 pole in series for the "+" and 1 pole for the "-". 4-pole device with 2 poles in series by polarity.
(3) At 415 VAC.
(6) Value for coordination with any circuit-breaker that ensures tripping in less than 0.3s.
For coordination with specific circuit-breaker references, higher short-circuit current values are available. Please consult us.
(5) At 30ms.

800 to 3200 A / B6 to B8

Thermal current I_{th} at 40°C		800 A	1000 A	1250 A	1600 A	2000 A	2500 A	3200 A
Frame size		B6	B6	B6	B7	B8	B8	B8
Rated insulation voltage U_i (V) (power circuit)		1000	1000	1000	1000	1000	1000	1000
Rated impulse withstand voltage U_{imp} (kV) (power circuit)		12	12	12	12	12	12	12
Rated insulation voltage U_i (V) (operation circuit)		300	300	300	300	300	300	300
Rated impulse withstand voltage U_{imp} (kV) (operation circuit)		4	4	4	4	4	4	4
Rated operational currents I_e (A) according to IEC 60947-6-1								
Rated voltage	**Utilisation category**	**A/B(1)**	**A/B(1)**	**A/B(1)**	**A/B(1)**	**A/B(1)**	**A/B(1)**	**A/B(1)**
415 VAC	AC-31 B	800	1000	1250	1600	2000	2500	3200
415 VAC	AC-32 B	800	1000	1250	1600	2000	2000	2000
415 VAC	AC-33 B	800	800	800	1000	1250	1250	1250
Rated operational currents I_e (A) according to IEC 60947-3								
Rated voltage	**Utilisation category**	**A/B(1)**	**A/B(1)**	**A/B(1)**	**A/B(1)**	**A/B(1)**	**A/B(1)**	**A/B(1)**
415 VAC	AC-20 A / AC-20 B	800/800	1000/1000	1250/1250	1600/1600	2000/2000	2500/2500	3200/3200
415 VAC	AC-21 A / AC-21 B	800/800	1000/1000	1250/1250	1600/1600	-/2000	-/2500	-/3200
415 VAC	AC-22 A / AC-22 B	800/800	1000/1000	1250/1250	1600/1600	-/2000	-/2500	-/3200
415 VAC	AC-23 A / AC-23 B	800/800	1000/1000	1250/1250	1250/1250	-/1600	-/1600	-/1600
500 VAC	AC-20 A / AC-20 B	800/800	1000/1000	1250/1250	1600/1600	2000/2000	2500/2500	3200/3200
500 VAC	AC-21 A / AC-21 B	800/800	1000/1000	1250/1250	1600/1600	-/2000	-/2500	-/3200
500 VAC	AC-22 A / AC-22 B	630/630	800/800	1000/1000	1600/1600			
500 VAC	AC-23 A / AC-23 B	400/400	630/630	800/800	1000/1000			
690 VAC	AC-20 A / AC-20 B	800/800	1000/1000	1250/1250	1600/1600	2000/2000	2500/2500	3200/3200
690 VAC	AC-21 A / AC-21 B	800/800	1000/1000	1250/1250	1600/1600	-/2000	-/2500	-/3200
690 VAC	AC-22 A / AC-22 B	630/630	800/800	1000/1000	1000/1000			
690 VAC	AC-23 A / AC-23 B	400/400	630/630	800/800	800/800			
220 VDC(2)	DC-20 A / DC-20 B	800/800	1000/1000	1250/1250	1600/1600			
220 VDC(2)	DC-21 A / DC-21 B	800/800	1000/1000	1250/1250	1250/1250			
220 VDC(2)	DC-22 A / DC-22 B	800/800	1000/1000	1250/1250	1250/1250			
220 VDC(2)	DC-23 A / DC-23 B	800/800	1000/1000	1250/1250	1250/1250			
440 VDC(2)	DC-20 A / DC-20 B	800/800	1000/1000	1250/1250	1600/1600			
440 VDC(2)	DC-21 A / DC-21 B	800/800	1000/1000	1250/1250	1250/1250			
440 VDC(2)	DC-22 A / DC-22 B	800/800	1000/1000	1250/1250	1250/1250			
440 VDC(2)	DC-23 A / DC-23 B	800/800	1000/1000	1250/1250	1250/1250			
Fuse protected short-circuit withstand as per IEC 60947-3 at 415 VAC								
Prospective short-circuit current (kA rms)		50	100	100	100			
Associated fuse rating (A)		800	1000	1250	2x800			
Circuit breaker protected short-circuit withstand with any circuit breaker that ensures tripping in less than 0.3s(3)								
Rated short-time withstand current 0.3s I_{cw} (kA rms)		47	64	64	78	78	78	78
Rated short-circuit withstand without protection								
Rated short-time withstand current 60ms I_{cw} (kA rms) as per IEC 60947-6-1 at 415 VAC		16	20	25	32	40	50	50
Rated short-time withstand current 1ms I_{cw} (kA rms) as per IEC 60947-3 at 415 VAC		26	35	35	50	50	50	50
Rated peak withstand current (kA peak) as per IEC 60947-3 at 415 VAC		55	55	80	110	120	120	120
Connection								
Maximum Cu cable cross-section (mm²)		2 x 185	2 x 240					
Minimum Cu busbar cross-section (mm²)		2 x 50 x 5	2 x 50 x 5	2 x 60 x 5	2 x 80 x 5	2 x 100 x 10	2 x 100 x 10	2 x 100 x 10
Maximum Cu cable cross-section (mm²)		2 x 300	4 x 185	4 x 185	6 x 185			
Maximum Cu busbar width (mm)		63	63	63	100	100	100	100
Tightening torque mini / maxi (Nm)		20/26	20/26	20/26	40/45	40/45	40/45	40/45
Switching time (Standard setting)								
I-0 or II-0 (s)		2.6	2.6	2.6	2.6	2	2	2
I - II or II - I (s)		1.6	1.6	1.6	1.6	1	1	1
Duration of "electrical blackout" I - II (s)		1.5	1.5	1.5	1.6	1	1	1
Power supply								
min / max (VAC)		166/332	166/332	166/332	166/332	166/332	166/332	166/332
Control supply power demand								
Power supply 230 VAC inrush / nominal (VA) - ATyS		460/184	460/184	460/184	460/230	812/322	812/322	812/322
Power supply 230 VAC inrush / nominal (VA) - ATyS d, t, g, p		482/206	482/206	482/206	482/252	834/344	834/344	834/344
Mechanical characteristics								
Durability (number of operating cycles)		4 000	4 000	4 000	3 000	3 000	3 000	3 000
Weight ATyS 3/4 P (kg)		27.9 / 32.2	28.4 / 32.9	28.9 / 33.6	33.1 / 39.4	50.7 / 61.6	50.7 / 61.6	61.0 / 75.3
Weight ATyS d 3/4 P (kg)		28.5 / 32.8	29.0 / 33.5	29.5 / 34.2	33.7 / 40.0	51.3 / 62.2	51.3 / 62.2	61.6 / 75.9
Weight ATyS r, t, g, p 3/4 P (kg)		29.0 / 33.3	29.5 / 34.0	30.0 / 34.7	34.2 / 40.5	51.8 / 62.7	51.8 / 62.7	62.1 / 76.4

(1) Category with index A = frequent operation - Category with index B = infrequent operation.
(2) 3-pole device with 2 pole in series for the "+" and 1 pole for the "-".
4-pole device with 2 poles in series by polarity.
(3) Value for coordination with any circuit-breaker that ensures tripping in less than 0.3s.

For coordination with specific circuit-breaker references, higher short-circuit current values are available. Please consult us.

9. PREVENTIVE MAINTENANCE

It is recommended to verify the tightening torque of all connections and to operate the product in a full operating cycle (I – 0 – II – 0 – I: Auto and Manual) at least once a year.

Note: Maintenance should be planned carefully and carried out by qualified and authorised personnel. Consideration of the critical level and application where the product is installed should form an essential and integral part of the maintenance plan. Good engineering practice is imperative whilst all necessary precautions must be taken to ensure that the intervention (whether directly or indirectly) remains safe in all aspects.

10. TROUBLE SHOOTING GUIDE

The ATyS d does not operate electrically	• Verify the power supply on terminals 101-102 and 201-202: 208 - 277 Vac ±20 % • Verify that the front selector switch is in position (AUT) • Verify that contacts 313 and 317 are open. • Verify that the power LED (Green) is On whilst the fault LED (RED) is off. • Verify presence of at least one green LED on the DPS module. • Verify that the product is available with contacts 63A and 64A closed.
It is not possible to manually operate the switch	• Verify that the front selector switch position is on the Manual position. • Make sure that the product is not padlocked • Verify the rotation direction of the handle • Apply a sufficient progressive action in the direction as indicated on the handle.
Electrical operation does not correspond to external order I,O,II	• Verify the selected control logic wiring (impulse or contactor) • Verify the connector connections.
The fault/manuel LED is ON	• The FAULT / MANUAL LED is on when in manual mode (this is normal) and in AUT Mode when there is an internal fault in the ATyS d. To reset a fault condition switch the ATyS d from AUT to Manu and back to AUT. Should the fault LED remain on you will need to localize and clear the fault prior to reset. • The FAULT / Manual LED will also be on when contact 313 is closed with 317. (Force the ATyS d to off position). This is a normal condition. • Should the Fault LED remain on abnormally, contact SOCOMEC.
Impossible to padlock	• Verify that the front selector switch is in manual position • Verify that the emergency handle for manual operation is not inserted into the ATyS d manual slot. • Verify that the ATyS d is in 0 position (Padlocking is only possible in 0 position for standard products)

11. ACCESSORIES

11.1. Terminal shrouds

Use
IP2X protection against direct contact with terminals or connecting parts.

Advantages
Perforations allow remote thermographic inspection without the need to remove the shrouds.

Rating (A)	Frame size	No. of poles	Position	Reference
125 … 200	B3	3 P	top / bottom / front (I) / rear (II)	2694 **3014**(1)(2)
125 … 200	B3	4 P	top / bottom / front (I) / rear (II)	2694 **4014**(1)(2)
250 … 400	B4	3 P	top / bottom / front (I) / rear (II)	2694 **3021**(1)(2)
250 … 400	B4	4 P	top / bottom / front (I) / rear (II)	2694 **4021**(1)(2)
500 … 630	B5	3 P	top / bottom / front (I) / rear (II)	2694 **3051**(1)(2)
500 … 630	B5	4 P	top / bottom / front (I) / rear (II)	2694 **4051**(1)(2)

(1) To shroud front switch top and bottom 2 references required.
(2) To fully shroud front, rear, top and bottom 4 references required.

acces_206_a_2_cat

11.2. Terminal screens

Use
Top and bottom protection against direct contact with terminals or connection parts.

For upstream and downstream protection, order the reference once.

Rating (A)	Frame size	No. of poles	Position	Reference
125 … 200	B3	3 P	top / bottom	1509 **3012**
125 … 200	B3	4 P	top / bottom	1509 **4012**
250 … 400	B4	3 P	top / bottom	1509 **3025**
250 … 400	B4	4 P	top / bottom	1509 **4025**
500 … 630	B5	3 P	top / bottom	1509 **3063**
500 … 630	B5	4 P	top / bottom	1509 **4063**
800 … 1250	B6	3 P	top / bottom	1509 **3080**
800 … 1250	B6	4 P	top / bottom	1509 **4080**
1600	B7	3 P	top / bottom	1509 **3160**
1600	B7	4 P	top / bottom	1509 **4160**
2000 … 3200	B8	3 P	top / bottom	1509 **3200**
2000 … 3200	B8	4 P	top / bottom	1509 **4200**

acces_207_a_2_cat

11.3. Bridging bars

Use
For bridging power terminals on the top or bottom side of the switch.
One piece required per pole.

Rating (A)	Frame size	No. of poles	Section (mm)	Reference
125 … 200	B3	3 P	20 x 2.5	4109 **3019**
125 … 200	B3	4 P	20 x 2.5	4109 **4019**
250	B4	3 P	25 x 2.5	4109 **3025**
250	B4	4 P	25 x 2.5	4109 **4025**
315 … 400	B4	3 P	32 x 5	4109 **3039**
315 … 400	B4	4 P	32 x 5	4109 **4039**
500	B5	3 P	32 x 5	4109 **3050**
500	B5	4 P	32 x 5	4109 **4050**
630	B5	3 P	50 x 5	4109 **3063**
630	B5	4 P	50 x 5	4109 **4063**
800 … 1000	B6	3 P	50 x 6	4109 **3080**
800 … 1000	B6	4 P	50 x 6	4109 **4080**
1250	B6	3 P	60 x 8	4109 **3120**
1250	B6	4 P	60 x 8	4109 **4120**
1600	B7	3 P	90 x 10	4109 **3160**
1600	B7	4 P	90 x 10	4109 **4160**

acces_205_a_2_cat

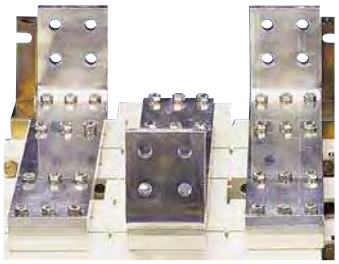

acces_041_a_1_cat

11.4. Copper bar connection kits

Use

Enables:

- connection between the two power terminals of the same pole for 2000 to 3200 A ratings (Fig. 1 and Fig. 2)
- top or bottom bridging connection (Fig. 3). For 3200 A rating, the connection pieces (part A) are delivered bridged from factory.

Bolt sets must be ordered separately. The user manual for these specific accessories can be downloaded from www.socomec.com.

Fig. 1

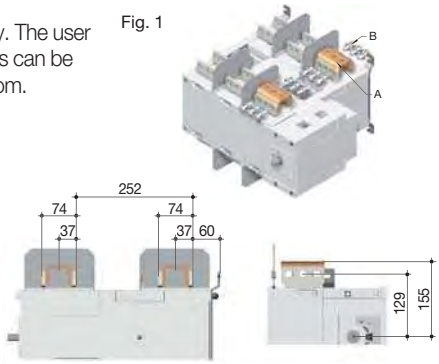

acces_226_b_1_x_cat

acces_232_a_1_cat

Fig. 2

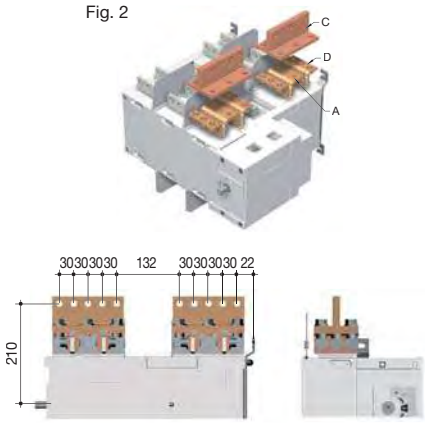

acces_228_b_1_x_cat

acces_233_a_1_cat

Fig. 3

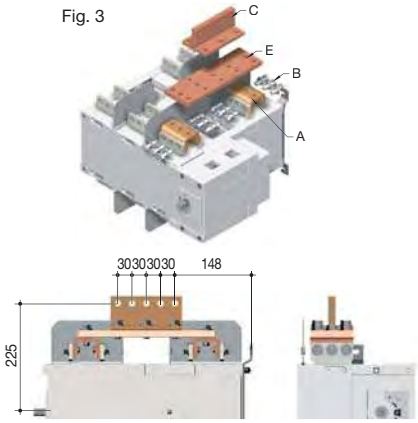

acces_230_b_1_x_cat

acces_234_a_1_cat

Top or bottom flat connection - Fig. 1

Rating (A)	Frame size	Piece	Quantity to order per pole(1)	Reference
2000 … 2500	B8	Connection - part A	2	2619 **1200**
2000 … 2500	B8	Bolt set - part B	2	2699 **1200**
3200	B8	Connection - part A		included
3200	B8	Bolt set - part B	2	2699 **1200**

Top or bottom edgewise connection - Fig. 2

Rating (A)	Frame size	Piece	Quantity to order per pole(1)	Reference
2000 … 2500	B8	Connection - part A	2	2619 **1200**
2000 … 2500	B8	T piece - part C	2	2629 **1200**(2)
2000 … 2500	B8	Bracket- part D	2	2639 **1200**(2)
3200	B8	Connection - part A		included
3200	B8	T piece - part C	2	2629 **1200**(2)
3200	B8	Bracket- part D	2	2639 **1200**(2)

Top or bottom bridging connection - Fig. 3

Rating (A)	Frame size	Piece	Quantity to order per pole(1)	Reference
2000 … 2500	B8	Connection - part A	2	2619 **1200**
2000 … 2500	B8	Bolt set - part B	2	2699 **1200**
2000 … 2500	B8	Bar - part E	1	4109 **0320**(2)
2000 … 2500	B8	T piece - part C	1	2629 **1200**(2)
3200	B8	Connection - part A		included
3200	B8	Bolt set - part B	2	2699 **1200**
3200	B8	Bar - part E	1	4109 **0320**(2)
3200	B8	T piece - part C	1	2629 **1200**(2)

(1) Example for 3 pole device equipped upstream only: Order 3 times the indicated quantities.
(2) Bolt set is provided with the accessories.

11.5. Solid neutral

Use

The connection kit enables the connection between the input and output neutrals, without any need to switch the neutral.

Rating (A)	Frame size	Reference
125 … 200	B3	9509 **0012**
200 … 315	B4	9509 **0025**
400	B4	9509 **0040**
500 … 630	B5	9509 **0063**
800 … 1000	B6	9509 **0080**
1250	B6	9509 **0120**
1600	B7	9509 **0160**

11.6. Autotransformer 400/230 VAC

Use

For applications without neutral, this autotransformer provides the 230 VAC required to power these ATyS products.

Rating (A)	Frame size	Reference
125 … 3200	B3 … B8	1599 **4064**

11.7. DC power supply

Use

Allows an ATyS to be supplied from a 12 or 24 VDC source.

To be positioned as close as possible to the DC power supply source.

Rating (A)	Frame size	Operating voltage	Reference
125 … 3200	B3 … B8	12 VDC / 230 VAC	1599 **5012**
125 … 3200	B3 … B8	24 VDC / 230 VAC	1599 **5112**

11.8. Voltage relay

Use

The ATyS DS is a voltage relay for monitoring a three-phase power supply source.

The fault relay will close as soon as a fault is detected on the supply being monitored.

Rating (A)	Reference
DS	192X **0056**

atys_762_a_1_cat

11.9. Door protective surround

Use

When direct access to the ATyS front face (mode selection, manual operation, display....) is required, the door surround can be utilised to provide a clean and safe finish to the panel's cut-out.

For ATyS r		
Rating (A)	**Frame size**	**Reference**
125 … 630	B3 … B5	1529 **0012**
800 … 3200	B6 … B8	1529 **0080**

For ATyS d, t, g and p		
Rating (A)	**Frame size**	**Reference**
125 … 630	B3 … B5	1539 **0012**
800 … 3200	B6 … B8	1539 **0080**

atys_595_a_2_cat

11.10. Auxiliary contacts (additional)

Use

Pre breaking and signalling of positions I and II: each reference provides a single factory or customer fitted NO/NC contacts for both positions.

Low level auxiliary contacts: please consult us.

Rating (A)	Frame size	Nominal current (A)	Operating current I_e (A)			
			250 VAC AC-13	400 VAC AC-13	24 VDC DC-13	48 VDC DC-13
125 … 3200	B3 … B8	16	12	8	14	6

Rating (A)	Frame size	Type of mounting	Reference
125 … 630	B3 … B5	Customer fitted	1599 **0502**(1)
125 … 630	B3 … B5	Factory fitted	1599 **0002**(1)
800 … 1600	B6 … B7	Customer fitted	1599 **0532**(1)
800 … 1600	B6 … B7	Factory fitted	1599 **0032**(1)
2000 … 3200	B8	-	included

(1) Up to 2 auxiliary contacts can be ordered.

125 to 630 A

acces_397_a

800 to 1600 A

acces_396_a

11.11. Mounting spacers

Use

Increases the distance between the rear power terminals and the backplate by 1 cm per spacer.

This accessory may also be used to replace the original mounting spacers.

Rating (A)	Frame size	Description of accessories	Reference
125 … 630	B3 … B5	1 set of 2 spacers	1509 **0001**

atys_009_b_2_cat

11.12. 3 position padlocking (I - 0 - II)

Use

Enables the ATyS to be padlocked in the 3 positions 0, I and II (factory fitted).

Rating (A)	Frame size	Reference
125 … 630	B3 … B5	9599 **0003**
800 … 3200	B6 … B8	9599 **0004**

11.13. RONIS Key interlocking system

Use

With the product in manual mode, it enables locking in position 0 using a RONIS EL11AP lock (factory fitted).

As standard, locking in position 0.

Optional padlocking in 3 positions: locking in position I, 0 or II.

Rating (A)	Frame size	Reference
125 … 630	B3 … B5	9599 **1006**
800 … 3200	B6 … B8	9599 **1004**

atys_868_a

11.14. Remote interface

Use

To remotely display source availability and position indication typically used on the front of a panel when the product is enclosed.

Interfaces are powered from the ATyS transfer switch via the RJ45 connection cable.

Maximum cable length: 3 m.

D10 - for ATyS d, t and g

To display source availability and position indication on the front panel of an enclosure. Protection degree: IP21.

D20 - for ATyS p

In addition to the functions of the ATyS D10, the D20 displays measurements and enables control and configuration from the front of a panel.

Protection degree: IP21.

Door mounting

2 holes Ø 22.5. ATyS transfer switch connection via RJ45 cable, not isolated.

Cable available as an accessory.

atys_564_d_1_cat

atys_565_d_1_cat

Description of accessories	Reference
D10	9599 **2010**
D20	9599 **2020**

Interfaces are powered from the ATyS

atys_597_a_1_cat

Drillings

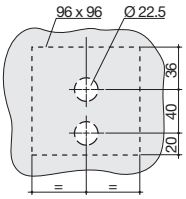

atys_161_a_1_x_cat

11.15. Connection cable for remote interface

Use

To connect between a remote interface (type D10 or D20) and an ATyS transfer switch (ATyS d, t, g or p).

RJ45 8 wire straight-through, non isolated cable. Length 3m.

Characteristics

For ATyS d, t, g and p		
Type	**Length**	**Reference**
RJ45 cable	3 m	1599 **2009**

acces_209_a_2_cat

11.16. Auto/Manual key selector

Use

Replaces the standard Auto/Manual selector knob with a key selector, providing added security by preventing unauthorised use of product. Customer assembly required.

Rating (A)	Frame size	Reference
125 … 3200	B3 … B8	9599 **1007**

atys_869_a

12. Spare parts

12.1. Electronic module

The electronic module of ATyS d, t, g and p can be easily replaced in case of problems, even when the load is supplied.

Product model	References
ATyS d	9539 **2001**
ATyS t	9549 **2001**
ATyS g	9559 **2001**
ATyS p	9579 **2001**

atys_621_c_1_gb_cat

12.2. Motorisation module

The motorisation module of ATyS r, d, t, g and p can be easily replaced in case of problems, even when the load is supplied.

Rating	References
125 ... 200 A	9509 **5020**
250 ... 400 A	9509 **5040**
500 ... 630 A	9509 **5063**
800 ... 1250 A	9509 **5120**
1600 A	9509 **5160**
2000 ... 3200 A	9509 **5320**

atys_871_a

12.3. Power section

References to be used for replacing the switching module of ATyS r, d, t, g or p. Please contact SOCOMEC.

13. ATYS Family: ORDERING INFORMATION

The following is an ordering guide for ATYS Motorised Transfer Switches delivered inclusive of the emergency handle and storage clip. This guide is intended so as to explain the logic behind SOCOMEC ATYS reference numbers.

When ordering please consult the latest SOCOMEC catalogue.

Typical UL 1008 (Optional Standby Power) ATYS reference

97 2 3 4 0 1 0

Product	Type	Ctrl Voltage	N° of poles	Rating
97 - UL : I - O - II	2 - ATYS	3 - 230VAC (208-277VAC Nominal)	2-2 Pole 3-3 Pole 4-4 Pole	010 - 100A 020 - 200A 026 - 260A 040 - 400A

Note: only valid for UL 1008 products

Typical IEC 60947-6-1 ATYS reference

95 2 3 4 063

Product	Type	Ctrl Voltage	N° of poles	Rating
95 - IEC: I - O - II	2 - ATyS r 3 - ATyS d 4 - ATyS t 5 - ATyS g 7 - ATyS p	3 - 230VAC (166-332VAC)	3-3 Pole 4-4 Pole	012 - 125A 016 - 160A 020 - 200A 025 - 250A 031 - 315A 040 - 400A 050 - 500A 053 - 630A 080 - 800A 100 - 1000A 120 - 1250A 180 - 1600A 200 - 2000A 250 - 2500A 320 - 3200A Ratings Ith @ 40 °C

Socomec worldwide

IN EUROPE

BELGIUM
Critical Power / Power Control & Safety / Energy Efficiency / Solar Power Power
Tel. +32 2 340 02 30
Fax +32 2 346 28 99
info.be@socomec.com

FRANCE
Critical Power / Power Control & Safety / Energy Efficiency / Solar Power
Tel. +33 1 45 14 63 00
Fax +33 1 48 67 31 12
dcm.ups.fr@socomec.com

GERMANY
Critical Power
Tel. +49 621 71 68 40
Fax +49 621 71 68 444
info.ups.de@socomec.com

Power Control & Safety / Energy Efficiency
Tel. +49 7243 65292 0
Fax +49 7243 65292 13
info.scp.de@socomec.com

ITALY
Critical Power
Tel.+39 02 98 242 942
Fax +39 02 98 240 723
info.ups.it@socomec.com

Power Control & Safety / Energy Efficiency
Tel.+39 02 98 49 821
Fax +39 02 98 24 33 10
info.scp.it@socomec.com

Solar Power
Tel. +39 0444 598611
Fax +39 0444 598627
info.solar.it@socomec.com

NETHERLANDS
Critical Power / Power Control & Safety / Energy Efficiency / Solar Power
Tel. +31 30 760 0900
Fax +31 30 637 2166
info.nl@socomec.com

POLAND
Critical Power / Solar Power
Tel. +48 22 825 73 60
Fax. +48 22 825 73 70
info.ups.pl@socomec.com

Power Control & Safety / Energy Efficiency
Tel. +48 91 442 64 11
Fax +48 91 442 64 19
info.scp.pl@socomec.com

PORTUGAL
Critical Power / Power Control & Safety / Energy Efficiency / Solar Power
Tel.+351 261 812 599
Fax +351 261 812 570
info.ups.pt@socomec.com

ROMANIA
Critical Power / Power Control & Safety / Energy Efficiency / Solar Power
Tel. +40 21 319 36 88
Fax +40 21 319 36 89
info.ro@socomec.com

RUSSIA
Critical Power / Power Control & Safety / Energy Efficiency / Solar Power
Tel. +7 495 775 19 85
Fax +7 495 775 19 85
info.ru@socomec.com

SLOVENIA
Critical Power / Power Control & Safety / Energy Efficiency / Solar Power
Tel. +386 1 5807 860
Fax +386 1 561 11 73
info.si@socomec.com

SPAIN
Critical Power / Power Control & Safety / Energy Efficiency / Solar Power
Tel. +34 93 540 75 75
Fax +34 93 540 75 76
info.es@socomec.com

TURKEY
Critical Power / Power Control & Safety / Energy Efficiency / Solar Power
Tel. +90 216 540 71 20-21-22
Fax +90 216 540 71 27
info.tr@socomec.com

UNITED KINGDOM
Critical Power
Tel.+44 1285 863 300
Fax+44 1285 862 304
info.ups.uk@socomec.com

Power Control & Safety / Energy Efficiency
Tel. +44 1462 440 033
Fax +44 1462 431 143
info.scp.uk@socomec.com

IN ASIA PACIFIC

AUSTRALIA
Critical Power / Power Control & Safety
Tel. +61 2 9325 3900
Fax +61 2 9888 9544
info.ups.au@socomec.com

CHINA
Critical Power / Power Control & Safety / Energy Efficiency
Tel. +86 21 52 98 95 55
Fax +86 21 62 28 34 68
info.cn@socomec.com

INDIA
Critical Power / Solar Power
Tel. +91 44 39215400
Fax +91 44 39215450 & 51
info.ups.in@socomec.com
info.solar.in@socomec.com

Power Control & Safety / Energy Efficiency
Tel. +91 124 4027210
Fax +91 124 4562738
info.scp.in@socomec.com

SINGAPORE
Critical Power / Power Control & Safety / Energy Efficiency
Tel.+65 6506 7600
Fax +65 64 58 7377
info.sg@socomec.com

THAILAND
Critical Power
Tel. +66 2 941 1644 7
Fax +66 2 941 1650
info.ups.th@socomec.com

IN MIDDLE EAST

UNITED ARAB EMIRATES
Critical Power / Power Control & Safety / Energy Efficiency / Solar Power
Tel.+971 4 29 98 441
Fax +971 4 29 98 449
info.ae@socomec.com

IN AMERICA

USA, CANADA & MEXICO
Power Control & Safety / Energy Efficiency
Tel. +1 617 245 0447
Fax +1 617 245 0437
info.us@socomec.com

OTHER COUNTRIES

NORTH AFRICA
Algeria / Morocco / Tunisia
info.naf@socomec.com

AFRICA
Other countries
info.africa@socomec.com

SOUTH EUROPE
Cyprus / Greece / Israel / Malta
info.se@socomec.com

SOUTH AMERICA
Tel. +34 93 540 75 75
info.es@socomec.com

MORE DETAILS
www.socomec.com/worldwide

HEAD OFFICE

SOCOMEC GROUP
SAS SOCOMEC capital 10 816 800€
R.C.S. Strasbourg B 548 500 149
B.P. 60010 - 1, rue de Westhouse
F-67235 Benfeld Cedex - FRANCE
Tel. +33 3 88 57 41 41
Fax +33 3 88 74 08 00
info.scp.isd@socomec.com

YOUR DISTRIBUTOR

www.socomec.com

Non contractual document. © 2014, Socomec SAS. All rights reserved. - Document printed on paper from sustainably managed forests.
Ref. 541 992 B - EN - 10/14